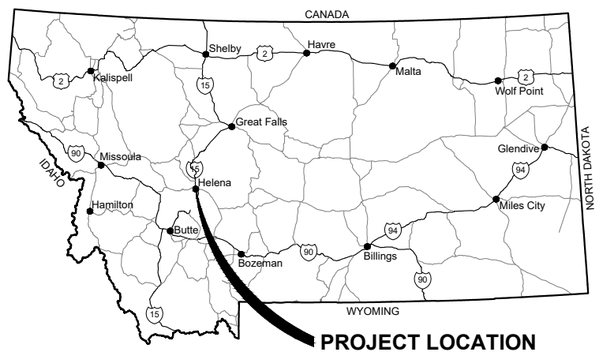

SUSSEX DEVELOPMENT, INC
WEST SIDE WOODS SUBDIVISION
PHASE 1 & 2 OFF SITE ROAD IMPROVEMENTS

CONSTRUCTION PLANS

FOR REVIEW

SECTIONS 23 AND 26, T 10 N, R 04 W, P.M.M, LEWIS & CLARK COUNTY, MONTANA

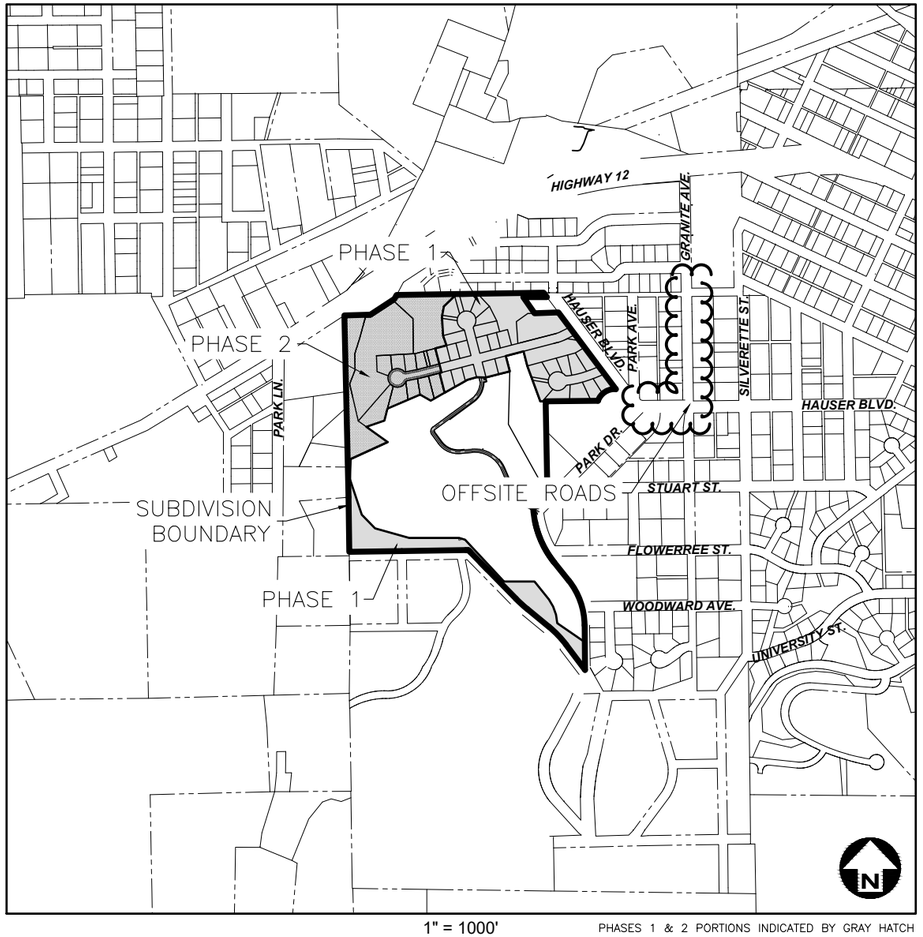

1" = 1000'

PHASES 1 & 2 PORTIONS INDICATED BY GRAY HATCH

SHEET INDEX

PROJECT: 2023-07

DATE: FEB. 2025

Sheet List Table

Sheet Number	*Sheet Title*
1	COVER
2	LEGEND & ABBREVIATIONS
3	CONSTRUCTION NOTES
4	MATERIALS TESTING
5	SHEET KEY - ROADS
6	TYPICAL ROAD SECTIONS - 1
7	TYPICAL ROAD SECTIONS - 2
8	HAUSER PLAN PROFILE-3
9	GRANITE AVE PLAN PROFILE - 1
10	GRANITE AVE PLAN PROFILE - 2
11	APPROACH CROSS SECTIONS - 1
12	APPROACH CROSS SECTIONS - 2
13	APPROACH CROSS SECTIONS - 3
14	GRANITE & HAUSER ROUNDABOUT DETAIL
15	GRANITE & HAUSER INTERSECTION DETAIL
16	GRANITE & HAUSER INTERSECTION PLAN AND PROFILE
17	GRANITE & KNIGHT INTERSECTION DETAIL
18	GRANITE & OVERLOOK INTERSECTION
19	GRANITE AVENUE SIGNAGE AND STRIPING
20	ROUNDABOUT SIGNING AND STRIPING
21	DETAILS
22	DETAILS - 2
23	DETAILS - 3
24	RETAINING WALL DETAILS
25	TRAFFIC CONTROL DETAIL - 1
26	TRAFFIC CONTROL DETAIL - 2

PLANS REVIEWED BY:

CITY OF HELENA CITY ENGINEER/PROJECT MANAGER

CITY OF HELENA — GUARDIAN OF THE GULCH — MONTANA

APPROVED BY:

Drew Pearson, E.S.
WWC ENGINEERING

QA/QC BY:

Shawn Higley, P.E.
WWC ENGINEERING

PLANS PREPARED BY:

WWC ENGINEERING
1275 MAPLE STREET, SUITE F
HELENA, MT 59601
(406) 443-3962

MONTANA
DARYL DREW PEARSON
No. 62631ES
LICENSED PROF. ENGINEER - LAND SURVEYOR

NO.	REVISION DESCRIPTION	BY	DATE

SET NO.

SHEET NO. 1

K:\Helena\ECO DEVELOPMENT LLC\2022292 West Side Subdivision 2nd Submittal\05CAD\Sheets\Phase 1\22292-COVR-OFFSITEROADS.dwg

ABBREVIATIONS

@	AT
Δ	ANGLE OF DEFLECTION, DELTA ANGLE
<PT	ANGLE POINT
AB	ANCHOR BOLT
ABDN	ABANDON
AC	ASBESTOS CONCRETE
ADDN	ADDITIONAL
ADJ	ADJACENT
AFF	ABOVE FINISHED FLOOR
ALT	ALTERNATE
ANSI	AMERICAN NATIONAL STANDARDS INSTITUTE
APPROX	APPROXIMATE
APVD	APPROVED
ARCH	ARCHITECTURE, ARCHITECTURAL
ASPH	ASPHALT
AVE	AVENUE
AVG	AVERAGE
BFV	BUTTERFLY VALVE
BLDG	BUILDING
BLK	BLOCK
BLVD	BOULEVARD
BM	BEAM, BENCHMARK
BOT	BOTTOM
BRG	BEARING
BRKT	BRACKET
BVC	BEGIN VERTICAL CURVE
C–C	CENTER TO CENTER
CHAN	CHANNEL
CHK	CHECK
CI	CAST IRON
CIPC	CAST–IN–PLACE CONCRETE
CIRC	CIRCULAR
CJ	CONSTRUCTION JOINT, CONTROL JOINT
℄	CENTER LINE
CLR	CLEAR, CLEARANCE
CMP	CORRUGATED METAL PIPE
CMU	CONCRETE MASONRY UNITS
CO	CLEANOUT
COL	COLUMN
CONC	CONCRETE
CONSTR	CONSTRUCTION
CONT	CONTINUE, CONTINUED, CONTINUOUS
CONTR	CONTRACTOR
COORD	COORDINATE
CP	CONTROL PANEL, CONTROL POINT
CPLG	COUPLING
CTR	CENTER
CTV	CABLE TELEVISION
CU	CUBIC, COPPER
CF	CUBIC FEET
CULV	CULVERT
CY	CUBIC YARD
DET	DETAIL
DI	DUCTILE IRON, DRAIN INLET
DIA, ø	DIAMETER
DIAG	DIAGONAL
DIM	DIMENSION
DR	DRIVE
DWG	DRAWING
E	EAST
EA	EACH
EL, ELEV	ELEVATION
ELB	ELBOW
ELEC	ELECTRIC, ELECTRICAL
ENCL	ENCLOSE
ENGR	ENGINEER
EOP	EDGE OF PAVEMENT
EQ	EQUAL, EQUALLY
EQ SP	EQUALLY SPACED
EQUIP	EQUIPMENT
EQUIV	EQUIVALENT
EVC	END VERTICAL CURVE
EW	EACH WAY
EXC	EXCAVATE
EXP	EXPANSION
EXP JT	EXPANSION JOINT
EXST	EXISTING
FCV	FLOW CONTROL VALVE
FD	FLOOR DRAIN
FDN	FOUNDATION
FES	FLARED END SECTION
FET	FLARED END TERMINAL
FF	FINISHED FLOOR
FG	FINISH GRADE
FHYD	FIRE HYDRANT
FJ	FLANGE JOINT
FL	FLOW LINE
FLEX	FLEXIBLE
FM	FORCEMAIN
FT	FOOT, FEET
FO	FIBER OPTIC
FTG	FOOTING, FITTING
G	NATURAL GAS
GA	GAGE, GAUGE
GAL	GALLON
GALV	GALVANIZED
GND	GROUND
GVL	GRAVEL
HB	HOSE BIB
HDPE	HIGH DENSITY POLYETHYLENE
HOR, HORIZ	HORIZONTAL
HWY	HIGHWAY
HYD	HYDRANT
ID	INSIDE DIAMETER
IE	INVERT ELEVATION
IN	INCH
INV	INVERT
JB	JUNCTION BOX
JT	JOINT
K	RATE OF VERTICAL CURVATURE
LBS	POUNDS
LF	LINEAR FEET
LN	LANE
LPG	LIQUID PROPANE GAS
LT	LEFT
MAX	MAXIMUM
MD	MEASURE DOWN
MFD	MANUFACTURED
MFR	MANUFACTURE, MANUFACTURER
MH	MANHOLE
MIN	MINIMUM
MISC	MISCELLANEOUS
MJ	MECHANICAL JOINT
MOV	MOTOR OPERATED VALVE
MPWSS	MONTANA PUBLIC WORKS STANDARD SPECIFICATIONS
N	NORTH
NE	NORTHEAST
NG	NATURAL GAS
NIC	NOT IN CONTRACT
NO	NUMBER
NOM	NOMINAL
NTS	NOT TO SCALE
NW	NORTHWEST
OC	ON CENTER
OD	OUTSIDE DIAMETER
OF	OVERFLOW
OH	OVERHEAD
OHP	OVERHEAD POWER
OHT	OVERHEAD TELEPHONE
OPNG	OPENING
PC	POINT OF CURVATURE
PCC	POINT OF COMPOUND CURVATURE
PE	PLAIN END, POLYETHYLENE
PERP	PERPENDICULAR
PI	POINT OF INTERSECTION
PL	PROPERTY LINE
PNL	PANEL
PRC	POINT OF REVERSE CURVATURE
PREFAB	PREFABRICATED
PRELIM	PRELIMINARY
PREP	PREPARE, PREPARATION
PROP	PROPERTY
PRV	PRESSURE REDUCING VALVE
PSF	POUNDS PER SQUARE FOOT
PSI	POUNDS PER SQUARE INCH
PT	POINT, POINT OF TANGENCY
PVC	POLYVINYL CHLORIDE
PVI	POINT OF VERTICAL INTERSECTION
PVMT	PAVEMENT
R, RAD	RADIUS
RC	REINFORCED CONCRETE
RCP	REINFORCED CONCRETE PIPE
RD	ROAD
RDCR	REDUCER
REBAR	REINFORCEMENT BAR
REF	REFERENCE
REINF	REINFORCE
REQD	REQUIRED
RR	RAILROAD
RST	REINFORCING STEEL
RT	RIGHT
R/W	RIGHT–OF–WAY
S	SOUTH, SANITARY SEWER
SAN	SANITARY
SCH	SCHEDULE
SD	STORM DRAIN
SDWK	SIDEWALK
SE	SOUTHEAST
SECT	SECTION
SF	SQUARE FOOT
SHT	SHEET
SIM	SIMILAR
SLP	SLOPE
SPEC	SPECIFICATION
SQ	SQUARE
SSTL	STAINLESS STEEL
STA	STATION
SS	SANITARY SEWER SERVICE
STD	STANDARD
ST	STREET
STL	STEEL
STRUCT	STRUCTURE
SW	SOUTHWEST
SYM	SYMMETRICAL
TB	THRUST BLOCK
TBC	TOP BACK OF CURB
TBM	TEMPORARY BENCH MARK
TEL	TELEPHONE
TEMP	TEMPORARY
THRU	THROUGH
TYP	TYPICAL
UG	UNDERGROUND
UGP	UNDERGROUND POWER
UGT	UNDERGROUND TELEPHONE
UTIL	UTILITY
V	VALVE, VOLT
VB	VALVE BOX
VERT	VERTICAL
VOL	VOLUME
W	WEST, WATER
WTR	WATER
WD	WOOD
W/	WITH
W/O	WITHOUT
WL	WETLAND
WM	WIRE MESH, WATER METER
WS	WATERSTOP, WATER SURFACE, WATER SERVICE
WT	WEIGHT
WV	WATER VALVE
WWF	WELDED WIRE FABRIC
WWM	WELDED WIRE MESH
XFMR	TRANSFORMER
X–ING	CROSSING
XS	CROSS SECTION
YD	YARD

LEGEND

EXISTING	PROPOSED	DESCRIPTION
		MAJOR CONTOUR
		MINOR CONTOUR
OHT	OHT	OVERHEAD TELEPHONE
UGT	UGT	UNDERGROUND TELEPHONE
CTV	CTV	CABLE TELEVISION
FO	FO	FIBER OPTIC
G	G	NATURAL GAS
OHP	OHP	OVERHEAD POWER
UGP	UGP	UNDERGROUND POWER
S	S	SANITARY SEWER
SS SS SS	SS SS SS	SANITARY SEWER SERVICE
FM	FM	SANITARY SEWER FORCEMAIN
SD	SD	STORM DRAIN
		STORM CULVERT
W	W	WATER
WS WS WS	WS WS WS	WATER SERVICE
		CHAINLINK FENCE
X X X	X X X	BARBED WIRE FENCE
		WOOD FENCE
		PAVED ROAD
		GRAVEL ROAD
		PROPERTY/LOT LINE
		PROPERTY EASEMENT
		PROPERTY SETBACK
		RIGHT–OF–WAY
		CITY LIMIT/DISTRICT BOUNDARY
		RAILROAD
		DITCH
		WATER EDGE
WL		WETLAND
		BUILDING
		BENCHMARK
		CONTROL POINT
		PROPERTY PIN
		BORING
		MONITORING WELL
		TEST PIT
		BOLLARD
		MAIL BOX
		SIGN

EXISTING	PROPOSED	DESCRIPTION
		STUMP
		SHRUB/BUSH
		TREE–CONIFER
		TREE–DECIDUOUS
		TREE LINE
		COMMUNICATION MANHOLE
		COMMUNICATION VAULT
		TELEPHONE RISER
		CABLE TV RISER
		NATURAL GAS METER
		NATURAL GAS RISER
		NATURAL GAS VALVE
		LIGHT POLE
		STREET LIGHT POLE
		POWER RISER
		PAD MOUNTED TRANSFORMER
		POWER VAULT
		UTILITY POLE
		GUY WIRE
		SANITARY MANHOLE
		SANITARY CLEANOUT
		SANITARY LAMPHOLE
		STORM MANHOLE
		STORM ROUND INLET
		STORM SQUARE INLET
		STORM CATCH BASIN
		11.25° ELBOW
		22.50° ELBOW
		45° ELBOW
		90° ELBOW
		TEE
		CROSS
		CAP
		FIRE HYDRANT
		GATE VALVE
		REDUCER
		WATER METER
		WELL
		CURB STOP
		FROST FREE HYDRANT

GENERAL NOTES:

1. THIS IS A STANDARD LEGEND AND ABBREVIATION LIST. THEREFORE, NOT ALL SYMBOLS AND ABBREVIATIONS MAY BE USED ON THIS PROJECT.
2. UNLESS MODIFIED BY THE CONTRACT DOCUMENTS, ALL WORK WILL CONFORM TO THE MONTANA PUBLIC WORKS STANDARD SPECIFICATIONS, SEVENTH EDITION, APRIL 2021 (REFERRED TO COLLECTIVELY AS MPWSS) AND 2013 CITY OF HELENA ENGINEERING STANDARDS.
3. EXISTING UNDERGROUND UTILITIES SHOWN ARE FROM THE BEST INFORMATION AVAILABLE. THIS INFORMATION IS APPROXIMATE AND MAY BE INCOMPLETE. FOR ACCURATE LOCATION, THE CONTRACTOR SHALL CONTACT, PRIOR TO EXCAVATION, THE UTILITIES UNDERGROUND LOCATION CENTER AT: 1–800–424–5555.

GENERAL DESIGN DESIGNATIONS:

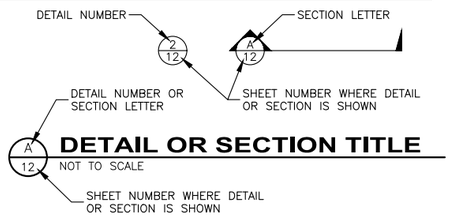

FOR REVIEW

NO.	REVISION DESCRIPTION	BY	DATE

PROJECT: 2023-07
DESIGNED: BJD
DRAWN: BJD
CHECKED: DDP
APPROVED: STH
DATE: FEB. 2025

MONTANA
DARYL DREW PEARSON
No. 62631ES
LICENSED PROFESSIONAL ENGINEER–LAND SURVEYOR

WWC ENGINEERING
1275 MAPLE STREET, SUITE F
HELENA, MT 59601
(406) 443-3962

SUSSEX DEVELOPMENT, INC.
WEST SIDE WOODS SUBDIVISION PHASE 1 & 2 OFFSITE ROAD IMPROVEMTNTS
LEGEND & ABBREVIATIONS

SHEET NO.
2
OF 26

K:\Helena\ECO DEVELOPMENT LLC\2022292 West Side Subdivision 2nd Submittal\05CAD\Sheets\Phase 1\22292-NOTE-ABBRV.dwg

GENERAL PROJECT NOTES:

1. UNLESS SPECIFICALLY SHOWN ON THE DRAWINGS, ALL WORK SHALL CONFORM TO MPWSS, LATEST EDITION AND THE CITY OF HELENA ENGINEERING AND DESIGN STANDARDS, LATEST EDITION. WHEN SPECIFICATIONS CONFLICT WITH ONE ANOTHER, THE MORE STRINGENT REQUIREMENT SHALL BE ADHERED TO.
2. THE CONTRACTOR SHALL BE RESPONSIBLE FOR ALL PERMITS REQUIRED FOR CONSTRUCTION ACTIVITIES PER PROJECT SPECIFICATIONS AND THESE PLANS.
3. THE CONTRACTOR SHALL RESTORE ALL ROADWAY SURFACES, CURB AND GUTTER, AND CONCRETE SURFACING TO EQUAL OR BETTER CONDITION THAN EXISTED PRIOR TO EXCAVATION, AS DETERMINED BY OWNER, ENGINEER, AND CITY OF HELENA.
4. THE CONTRACTOR SHALL NOTIFY ONE CALL AT 1-800-424-5555 OR 811 FOR ON SITE UTILITY LOCATION. ALL EXISTING UTILITIES SHALL BE MARKED BEFORE DIGGING.
5. THE CONTRACTOR SHALL MAINTAIN SERVICE OF ALL EXISTING UTILITIES. IF SAID SERVICE IS DAMAGED, THE CONTRACTOR SHALL IMMEDIATELY REPAIR THE DAMAGE AT THE CONTRACTOR'S EXPENSE.
6. THE CONTRACTOR SHALL FIELD VERIFY THE EXISTENCE, LOCATION, DEPTH, SIZE, LINE, AND GRADE OF EXISTING UTILITIES PRIOR TO CONSTRUCTION. THE CONTRACTOR SHALL BE RESPONSIBLE FOR ANY DAMAGE TO THE EXISTING FACILITIES DUE TO FAILURE TO LOCATE OR PROVIDE PROPER PROTECTION WHEN LOCATION IS KNOWN.
7. ALL QUANTITIES SHOWN IN THESE PLANS ARE FOR INFORMATIONAL PURPOSES ONLY. THE CONTRACTOR SHALL BE RESPONSIBLE FOR DETERMINING ACTUAL QUANTITIES.
8. THE CONTRACTOR IS RESPONSIBLE FOR CONTROLLING DUST AND EROSION DURING CONSTRUCTION. AREAS SHALL BE WATERED TO CONTROL DUST AS NEEDED OR WHEN ORDERED BY THE ENGINEER. WATER FOR DUST CONTROL IS THE CONTRACTOR'S RESPONSIBILITY. EROSION SHALL BE CONTROLLED IN ACCORDANCE WITH THE STATE OF MONTANA REGULATIONS. THE CONTRACTOR SHALL MAINTAIN A CURRENT STORM WATER POLLUTION PREVENTION PLAN ON SITE.
9. IN ACCORDANCE WITH MCA 70-22-15, THE CONTRACTOR SHALL REFERENCE ALL SURVEY MONUMENTS, PUBLIC LAND CORNERS AND PRIVATE PROPERTY CORNERS PRIOR TO BEGINNING CONSTRUCTION. ANY MONUMENTS DISTURBED OR OBLITERATED DURING CONSTRUCTION MUST BE REPLACED BY A LAND SURVEYOR LICENSED IN THE STATE OF MONTANA AT THE CONTRACTOR'S EXPENSE.
10. THE CONTRACTOR SHALL NOTIFY THE CITY OF HELENA AND/OR THE ENGINEER A MINIMUM OF 48 HOURS PRIOR TO BEGINNING WORK.
11. THE CONTRACTOR IS RESPONSIBLE FOR TRAFFIC CONTROL ON THIS PROJECT. THE WORK WILL BE WITHIN CITY OF HELENA AND COUNTY RIGHT-OF-WAYS FOR HAUSER BOULEVARD AND CITY RIGHT-OF-WAY FOR GRANITE STREET. THE CONTRACTOR IS RESPONSIBLE FOR ALL REQUIRED ACCESS AND PERMITS FOR WORK WITHIN COUNTY OR CITY RIGHT-OF-WAYS AND ALL PERMITS MUST BE RECEIVED BEFORE COMMENCING WORK.
12. WITH THE EXPECTED DISTURBANCE EXCEEDING 1.0 ACRE DURING CONSTRUCTION, THE CONTRACTOR SHALL BE RESPONSIBLE FOR OBTAINING A MPDES PERMIT AND COMPLYING WITH ALL TERMS OF THE PERMIT. NO SEPARATE PAYMENT WILL BE MADE FOR THIS WORK.
13. ALL DISTURBED MAILBOXES SHALL BE RESET PER THE MPWSS DETAIL REFERENCED IN THESE PLANS. THE CONTRACTOR SHALL PROVIDE TEMPORARY SUPPORTS FOR MAILBOXES DISTURBED DURING CONSTRUCTION TO ENSURE CONTINUED MAIL SERVICE.
14. TEMPORARY WATER SERVICE AND SANITARY SEWER BYPASS PUMPING SHALL BE PROVIDED BY THE CONTRACTOR, IF NECESSARY.
15. ALL RELOCATED UTILITIES AND CONDUITS INCLUDING BUT NOT LIMITED TO IRRIGATION, ELECTRICAL, GAS, PHONE, AND/OR CATV SHALL BE BURIED A MINIMUM 24" FROM FINISHED GRADE WITH TYPE A BACKFILL UTILIZING TYPE 1 BEDDING UNLESS DIRECTED OTHERWISE BY THE ENGINEER.
16. CONTRACTOR SHALL SEED ALL DISTURBED VEGETATIVE LAWN AREAS. PER COH ENGINEERING STANDARDS (TABLE 4-5), SEED TO BE PLANTED IN LAWN AREAS DISTURBED BY CONSTRUCTION SHALL BE THE FOLLOWING MIXTURE:

SPECIES	LBS PER ACRE (PURE LIVE SEED)	% OF PURE LIVE SEED	MAX % WEED SEED
HELMIN THOSPORIUM (MERION BLUEGRASS)	10	85	0.5

17. CONTRACTOR SHALL SEED ALL DISTURBED VEGETATIVE NATURAL GRASS OR OPEN AREAS. PER COH ENGINEERING STANDARDS (TABLE 4-6), SEED TO BE PLANTED IN AREAS WHERE NATURAL GRASSES HAVE BEEN REMOVED OR OTHERWISE DISTURBED SHALL BE THE FOLLOWING MIXTURE:

SPECIES	LBS PER ACRE (PURE LIVE SEED)	% OF PURE LIVE SEED	MAX % WEED SEED
THICKSPIKE WHEATGRASS "CRITANA"	8	81	0.5
STREAMBED WHEAT (WHEAT GRASS)	6	81	0.5
SLENDER WHEAT GRASS	6	81	0.5

19. NO SPECIFIC AREA WAS IDENTIFIED WITHIN THE PROJECT AREA INDICATING THE PRESENCE OF PETROLEUM-CONTAMINATED SOILS OR SOILS CONTAMINATED FROM OTHER SUBSURFACE WASTES. SHOULD CONTAMINATED SOILS BE ENCOUNTERED DURING CONSTRUCTION ACTIVITIES, THE CONTRACTOR SHALL NOTIFY THE ENGINEER AND THE MONTANA DEPARTMENT OF ENVIORNMENTAL QUALITY WITHIN 24 HOURS OF THE DISCOVERY OF ANY HAZARDOUS WASTES OR PETROLEUM-CONTAMINATED SOILS. THE CONTRACTOR MAY THEN DEVELOP A PLAN WITH THE ENGINEER AND CITY OF HELENA TO PROPERLY DISPOSE OF ANY CONTAMINATED SOILS ENCOUNTERED. THE CONTRACTOR SHALL COMPLY WITH ALL APPLICABLE FEDERAL, STATE, AND LOCAL REGULATIONS REGARDING THE REPORTING, HANDLING, AND DISPOSAL OF SUCH WASTES AND/OR SOILS.
20. ALL SEWER MANHOLES, VALVE BOXES, AND CURB STOPS SHALL BE RAISED TO FINISHED GRADE PER CITY OF HELENA ENGINEERING STANDARDS.
21. ALL PAVEMENT MARKINGS SHALL BE INSTALLED IN ACCORDANCE WITH THE CITY OF HELENA ENGINEERING AND DESIGN STANDARDS, SECTION 5.10, AND MPWSSS, LATEST EDITION.

CITY OF HELENA ENGINEERING STANDARDS - STANDARD DETAILS:

2-1	WATER VALVE COVER ADJUSTMENT
3-1	MANHOLE CASTING ADJUSTMENT
4-3	BEVELED END PIPE SECTION
4-6	TRASH GUARD FOR FLARED END SECTION
4-7	TEMPORARY CONSTRUCTION EXIST - COMMERCIAL
4-8	TIRE AND CONCRETE WASH BASIN
5-6	BOULEVARD DRIVEWAY APPROACH DETAIL (WITH FLAIR SECTIONS)
5-7	CURBSIDE SIDEWALK DRIVEWAY APPROACH DETAIL (WITH FLAIR SECTIONS)
5-8	CURBSIDE SIDEWALK DRIVEWAY APPROACH DETAIL (ALTERNATE)
5-9	ADA SIDEWALK CURB RAMP

NOTE:

ADDITIONAL STANDARD DETAILS MAY BE USED FROM THE CITY OF HELENA STANDARDS AND MPWSS STANDARDS THAT ARE NOT SHOWN ON THIS SHEET

MPWSS STANDARD DRAWINGS:

02221-1 TYPICAL UTILITY TRENCH DETAILS

STORM SEWER NOTES:

1. ALL CULVERTS AND STORM MAINS 24" ø OR GREATER MUST HAVE FETs AND TRASH RACKS.
2. ALL CHANNEL DISTURBANCE SHALL BE REVEGETATED WITH A NATIVE GRASS MIX PER CITY OF HELENA SPECIFICATIONS.
3. ALL STORM CULVERTS SHALL CONFORM TO CITY OF HELENA ENGINEERING STANDARDS SECTION 4.3.4.3.
4. INSTALL 8 OZ NON-WOVEN GEOTEXTILE UNDER ALL RIPRAP.

ROAD CONSTRUCTION NOTES:

1. PEDESTRIAN RAMPS SHALL BE INSTALLED AT ALL CURB/SIDEWALK INTERFACES AND SHALL MEET ADA STANDARDS.
2. CURB RADII IS FOR BACK OF CURBS UNLESS OTHERWISE INDICATED.
3. SIGNS TO BE INSTALLED WITH A TWO (2) FOOT MINIMUM HORIZONTAL CLEARANCE FROM THE FACE OF CURB AND A SEVEN (7) FOOT VERTICAL CLEARANCE MINIMUM.
4. STREET NAME SIGNS SHALL BE INSTALLED PER CITY OF HELENA STANDARDS AT LOCATIONS IDENTIFIED ON THESE PLANS. THE CONTRACTOR SHALL VERIFY STREET NAMES WITH THE CITY OF HELENA PRIOR TO ORDERING SIGNS.
5. THE CONTRACTOR SHALL CONSTRUCT NEW CURB AND GUTTER IN ACCORDANCE WITH CITY OF HELENA STANDARDS DRAWING 5-6.
6. THE CONTRACTOR SHALL CONSTRUCT VALLEY GUTTER IN ACCORDANCE MPWSS STANDARD DRAWING 02529-1.
7. THE PLANT MIX SURFACING SHALL BE TYPE-B.
8. CRUSHED BASE COURSE SHALL BE 1 1/2" MINUS AS PER MPWSS SECTION 02235.
9. ALL PAVEMENT MARKINGS SHALL BE INLAID THERMOPLASTIC, ACCORDING TO MPWSS 02585.
10. ALL TRAFFIC CONTROL SIGNING AND PAVEMENT MARKINGS HAVE BEEN DESIGNED AND SHALL BE INSTALLED IN ACCORDANCE WITH THE 2023 EDITION OF THE MANUAL ON UNIFORM TRAFFIC CONTROL DEVICES.

CITY TREE REQUIREMENTS

1. ALL BOULEVARD TREES SHALL BE CLASS I ALONG GRANITE AVENUE AND CLASS II ALONG HAUSER BOULEVARD. TREES IN ACCORDANCE WITH THE CITY OF HELENA ARBORICULTURE STANDARDS AND SPECIES AND INSTALLATION SHALL CONFORM TO THOSE STANDARDS. A TREE PERMIT WILL BE REQUIRED FOR ALL TREES LOCATED WITHIN THE STREET RIGHT-OF-WAY. THE CONTRACTOR SHALL BE RESPONSIBLE FOR OBTAINING THE NECESSARY TREE PERMIT PRIOR TO INSTALLATION OF BOULEVARD TREES.

FOR REVIEW

NO.	REVISION DESCRIPTION	BY	DATE

PROJECT: 2023-07
DESIGNED: BJD
DRAWN: BJD
CHECKED: DDP
APPROVED: STH
DATE: FEB. 2025

MONTANA
DARYL DREW PEARSON
No. 62631ES
LICENSED PROFESSIONAL ENGINEER - LAND SURVEYOR

WWC ENGINEERING
1275 MAPLE STREET, SUITE F
HELENA, MT 59601
(406) 443-3962

SUSSEX DEVELOPMENT, INC.
WEST SIDE WOODS SUBDIVISION PHASE 1 & 2 OFFSITE ROAD IMPROVEMTNTS
CONSTRUCTION NOTES

SHEET NO.
3
OF 26

K:\Helena\ECO DEVELOPMENT LLC\2022292 West Side Subdivision 2nd Submittal\05CAD\Sheets\Phase 1\22292-NOTE-GNRL.dwg

MPWSS AND CITY OF HELENA SUBMITTAL AND TESTING REQUIREMENTS

MATERIALS SUBMITTALS REQUIRED			
PRODUCT	PARTY RESPONSIBLE FOR SUBMITTAL	REQUIRED SUBMITTALS PRIOR TO MOBILIZATION	REQUIRED SUBMITTALS DURING CONSTRUCTION
STORM DRAINAGE MATERIALS	CONTRACTOR	MANUFACTURER'S CUT SHEETS AND PRODUCT MODEL NO. OR SPECIFICATIONS	N/A
ON SITE TRENCH BACKFILL MATERIAL	CONTRACTOR	GRADATIONS, PROCTOR, ATTERBERG LIMITS, P.I.	ONE (1) REPRESENTATIVE SAMPLE FOR EACH TYPE OF MATERIAL ENCOUNTERED
ON SITE UNCLASSIFIED EXCAVATION MATERIAL	CONTRACTOR	GRADATIONS, PROCTOR, ATTERBERG LIMITS, P.I.	ONE (1) REPRESENTATIVE SAMPLE FOR EACH TYPE OF MATERIAL ENCOUNTERED
SUB BASE COURSE	CONTRACTOR	GRADATIONS, PROCTOR, ATTERBERG LIMITS, P.I.	ONE (1) REPRESENTATIVE SAMPLE OF MATERIAL IMPORTED TO SITE
CRUSHED BASE COURSE	CONTRACTOR	GRADATIONS, PROCTOR, ATTERBERG LIMITS, P.I., FRACTURED FACES, WEAR	ONE (1) REPRESENTATIVE SAMPLE OF MATERIAL IMPORTED TO SITE
ASPHALT CONCRETE PAVEMENT	CONTRACTOR	PROJECT MIX DESIGN FROM SUPPLIER	SEE MATERIALS TESTING
ASPHALT SEAL COAT	CONTRACTOR	GRADATIONS, CLEANNESS, WEAR, FRACTURED FACES, STRIPPING, P.I.	ONE (1) REPRESENTATIVE SAMPLE OF MATERIAL IMPORTED TO SITE
ASPHALT PRIME AND OR TACK COAT	CONTRACTOR	PROJECT MIX DESIGN FROM SUPPLIER	N/A
CONCRETE	CONTRACTOR	PROJECT MIX DESIGN FROM SUPPLIER	SEE MATERIALS TESTING

PRODUCT	PARTY RESPONSIBLE TO OBTAIN TEST	TEST FREQUENCY	TEST REQUIREMENT AND STANDARD
TRENCH BACKFILL AND COMPACTION	CONTRACTOR	ONE (1) TEST PER 200 LINEAR FEET OF TRENCH [1]	TEST PER AASHTO T310. OBTAIN 95% BY AASHTO T99
SUB BASE COURSE	CONTRACTOR	ONE (1) TEST PER 100 LINEAR FEET	TEST PER AASHTO T310. OBTAIN 95% BY AASHTO T101
CRUSHED BASE COURSE	CONTRACTOR	ONE (1) TEST PER 100 LINEAR FEET	TEST PER AASHTO T310. OBTAIN 95% BY AASHTO T102
SUB GRADE COURSE	CONTRACTOR	ONE (1) TEST PER 100 LINEAR FEET OR CHANGE IN SOIL TYPE	TEST PER AASHTO T310. OBTAIN 95% BY AASHTO T101
ASPHALT CONCRETE PAVEMENT	CONTRACTOR	ONE (1) TEST PER 100 LINEAR FEET[2]	93% BY ASTM D2041 PER MPWSS
CONCRETE	CONTRACTOR	ONE (1) TEST PER POUR MINIMUM	TEMP., AIR, SLUMP, 4 CYLINDERS PER MPWSS

[1] CONTRACTOR SHALL PERFORM COMPACTION TESTING ON EVERY LIFT OF UTILITY TRENCH BACKFILL AT LEAST EVERY 200 FEET AND EVERY TIME THE BACKFILL MATERIAL CHANGES.
[2] CONTRACTOR SHALL ESTABLISH A ROLLING PATTERN EARLY IN THE PAVEMENT PROCESS BY TAKING A TEST FOR EVERY PASS AND RECORDING THE PERCENT MAXIMUM DENSITY. AT A MINIMUM, THIS PATTERN SHALL BE MAINTAINED THROUGHOUT THE ENTIRE PROJECT.

FOR REVIEW

NO.	REVISION DESCRIPTION	BY	DATE

PROJECT: 2023-07
DESIGNED: BJD
DRAWN: BJD
CHECKED: DDP
APPROVED: STH
DATE: FEB. 2025

MONTANA
DARYL DREW PEARSON
No. 62631ES
LICENSED PROFESSIONAL ENGINEER - LAND SURVEYOR

WWC ENGINEERING
1275 MAPLE STREET, SUITE F
HELENA, MT 59601
(406) 443-3962

SUSSEX DEVELOPMENT, INC.
WEST SIDE WOODS SUBDIVISION PHASE 1 & 2 OFFSITE ROAD IMPROVEMTNTS
MATERIALS TESTING

SHEET NO.
4
OF 26

K:\Helena\ECO DEVELOPMENT LLC\2022292 West Side Subdivision 2nd Submittal\05CAD\Sheets\Phase 1\2022292-QNTY.dwg

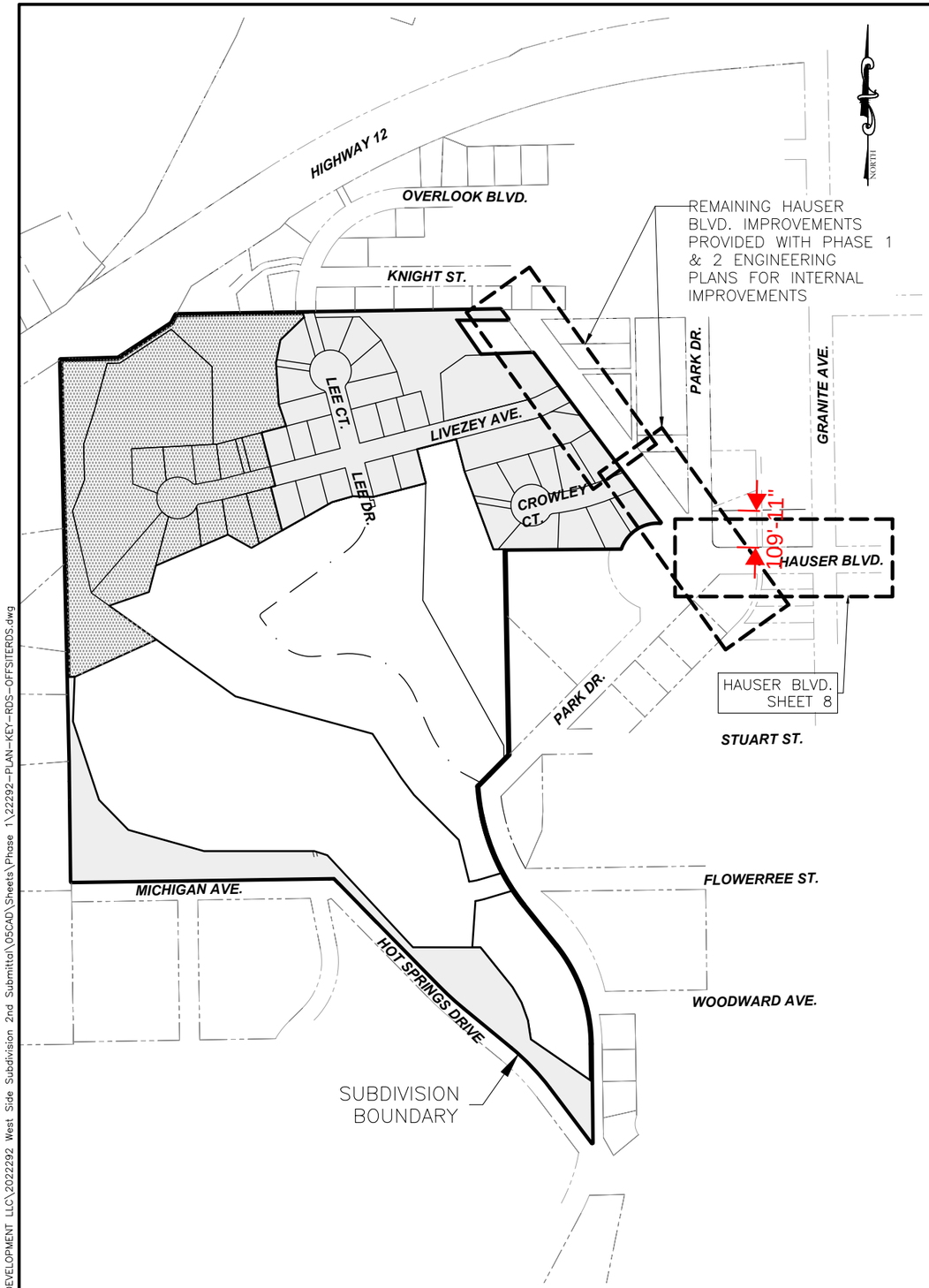

PLAN VIEW OF EAST-WEST ROADS

0 200 400
SCALE IN FEET

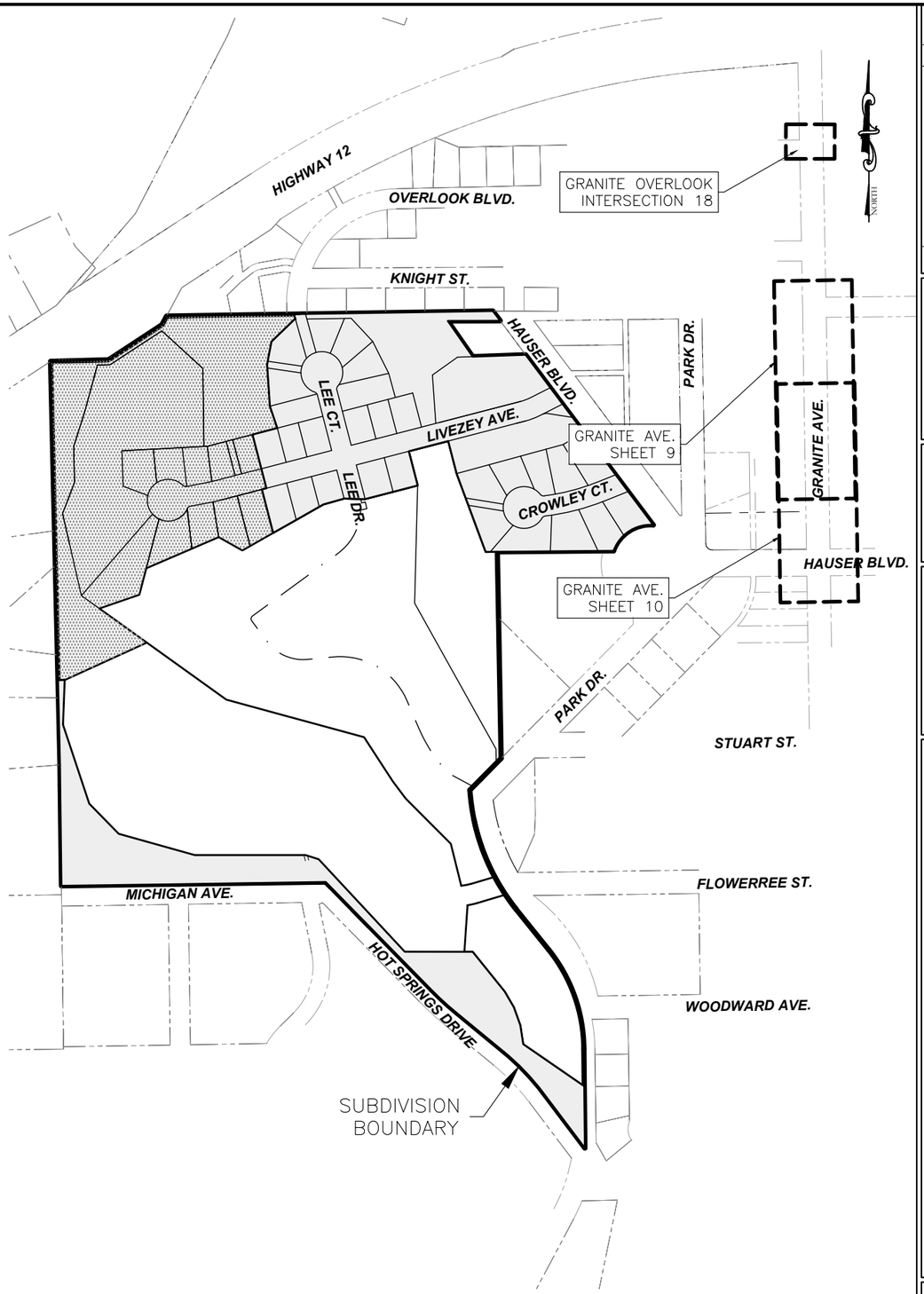

PLAN VIEW OF NORTH-SOUTH ROADS

0 200 400
SCALE IN FEET

FOR REVIEW

NO.	REVISION DESCRIPTION	BY	DATE

PROJECT: 2023-07
DESIGNED: BJD
DRAWN: BJD
CHECKED: DDP
APPROVED: STH
DATE: FEB. 2025

MONTANA
DARYL DREW PEARSON
No. 62631ES
LICENSED PROFESSIONAL ENGINEER-LAND SURVEYOR

WWC ENGINEERING
1275 MAPLE STREET, SUITE F
HELENA, MT 59601
(406) 443-3962

SUSSEX DEVELOPMENT, INC.
WEST SIDE WOODS SUBDIVISION PHASE 1 & 2 OFFSITE ROAD IMPROVEMTNTS
SHEET KEY - ROADS

SHEET NO.
5
OF 26

K:\Helena\ECO DEVELOPMENT LLC\20222292 West Side Subdivision 2nd Submittal\05CAD\Sheets\Phase 1\22292-PLAN-KEY-RDS-OFFSITERDS.dwg

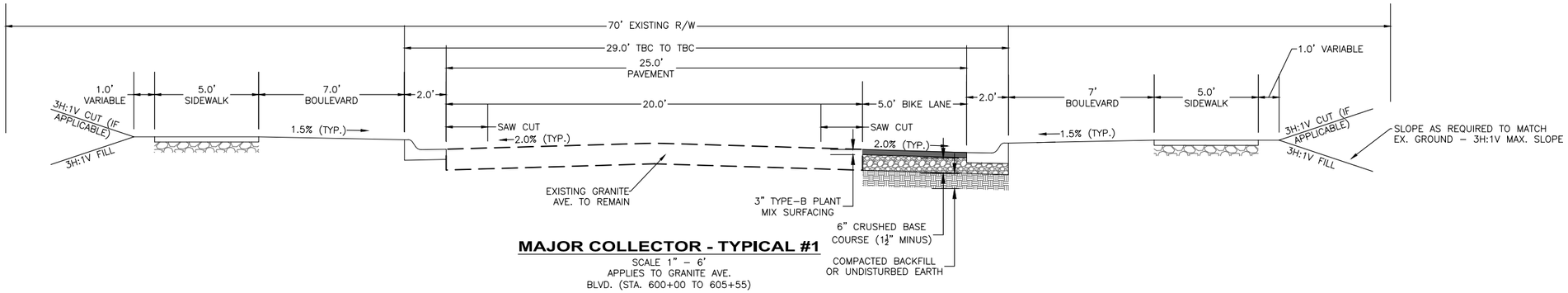

MAJOR COLLECTOR - TYPICAL #1

SCALE 1" – 6'
APPLIES TO GRANITE AVE.
BLVD. (STA. 600+00 TO 605+55)

NOTE:

1. CONTRACTOR TO FIELD VERIFY EXISTING PAVEMENT AND BASE COURSE THICKNESS. IF EXISTING PAVEMENT OR BASE COURSE IS THICKER THAN WHAT IS PROPOSED, CONTRACTOR SHALL MATCH THE EXISTING PAVEMENT OR BASE COURSE THICKNESS
2. CONTRACTOR TO WORK WITH ENGINEER TO DETERMINE MINIMUM SAW CUT WIDTH OF EXISTING ASPHALT.
3. SEAL AND COVER TO BE INSTALLED WITHIN ONE YEAR AFTER PAVING NEW BIKE LANE EXPANSION.

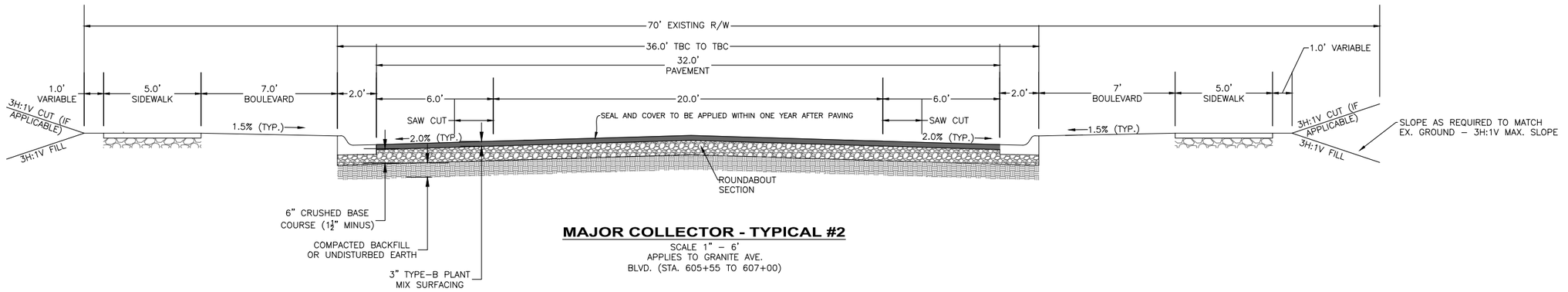

MAJOR COLLECTOR - TYPICAL #2

SCALE 1" – 6'
APPLIES TO GRANITE AVE.
BLVD. (STA. 605+55 TO 607+00)

CITY OF HELENA ROAD CONSTRUCTION NOTES

1. ALL EXISTING SIGNAGE THAT IS DAMAGED OR REMOVED AS A RESULT OF CONSTRUCTION ACTIVITIES SHALL BE REPLACED BY THE CONTRACTOR AT THEIR OWN EXPENSE. ALL TRAFFIC CONTROL SIGNAGE SHALL BE INSTALLED IN ACCORDANCE WITH THE MANUAL ON UNIFORM TRAFFIC CONTROL DEVICES, LATEST EDITION.
2. CONTRACTOR SHALL HAVE SOLE RESPONSIBILITY TO RETURN ALL DISTURBED AREAS DUE TO CONSTRUCTION TO THEIR PRE-CONSTRUCTION STATE.
3. CONTRACTOR SHALL BUILD ALL ROADS TO THE 3% CROSS SLOPES INDICATED ON THE TYPICAL SECTIONS. IF NECESSARY, A TRANSITION FROM NEW PAVEMENT TO EXISTING GRAVEL ROAD MAY BE REQUIRED.
4. ALL WORK SHALL CONFORM WITH MONTANA PUBLIC WORKS STANDARD SPECIFICATIONS (MPWSS), CITY OF HELENA STANDARDS, AND THESE PLANS.
5. 6" OF CRUSHED AGGREGATE COARSE, COMPACTED TO 95% MAXIMUM DRY DENSITY WILL BE PROVIDED UNDER ALL SIDEWALKS AND SHARD-USE PATHS.
6. NATIVE SUBGRADE AND/OR FILL SHALL BE COMPACTED TO A STANDARD RELATIVE COMPACTION (AASHTO T99) OF AT LEAST 95 PERCENT.
7. BEFORE ANY FILL IS PLACED, THE TOP 8" OF NATIVE SUBGRADE WILL BE SCARIFIED, MOISTURE CONDITION, IF NECESSARY, AND COMPACTED TO AT LEAST 95% OF MAXIMUM DRY DENSITY. ALL FILL SHALL ALSO BE COMPACTED TO AT LEAST 95% OF MAXIMUM DRY DENSITY. IF UNSTABLE MATERIAL IS ENCOUNTERED AS DETERMINED BY THE ENGINEER, IT SHALL BE REMOVED AND REPLACED WITH IMPORTED MATERIAL MEETING MPWSS AND GEOTECHNICAL REPORT REQUIREMENTS.

FOR REVIEW

NO.	REVISION DESCRIPTION	BY	DATE

PROJECT: 2023-07
DESIGNED: BJD
DRAWN: BJD
CHECKED: DDP
APPROVED: STH
DATE: FEB. 2025

MONTANA
DARYL DREW PEARSON
No. 62631ES
LICENSED PROFESSIONAL ENGINEER-LAND SURVEYOR

WWC ENGINEERING
1275 MAPLE STREET, SUITE F
HELENA, MT 59601
(406) 443-3962

SUSSEX DEVELOPMENT, INC.
WEST SIDE WOODS SUBDIVISION PHASE 1 & 2 OFFSITE ROAD IMPROVEMTNTS
TYPICAL ROAD SECTIONS - 1

SHEET NO.
6
OF 26

K:\Helena\ECO DEVELOPMENT LLC\2022292 West Side Subdivision 2nd Submittal\05CAD\Sheets\Phase 1\22292-ROAD_TYP.dwg

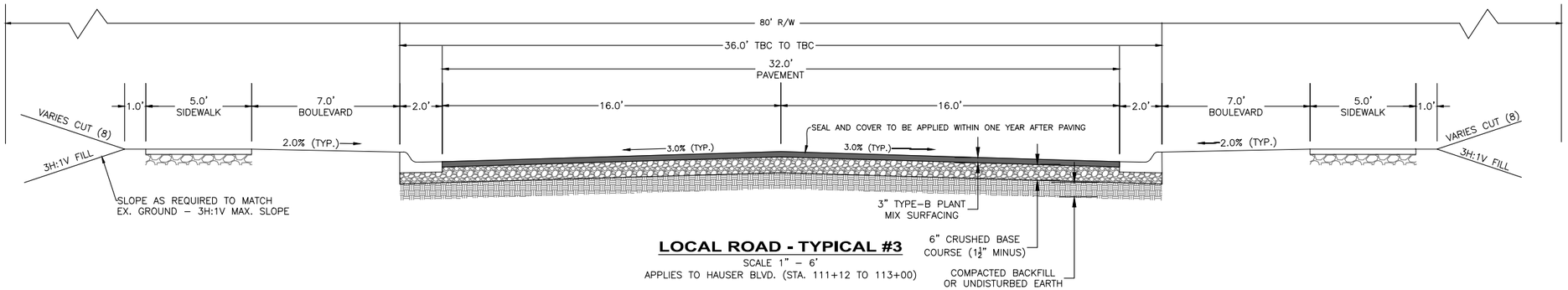

LOCAL ROAD - TYPICAL #3

SCALE 1" – 6'

APPLIES TO HAUSER BLVD. (STA. 111+12 TO 113+00)

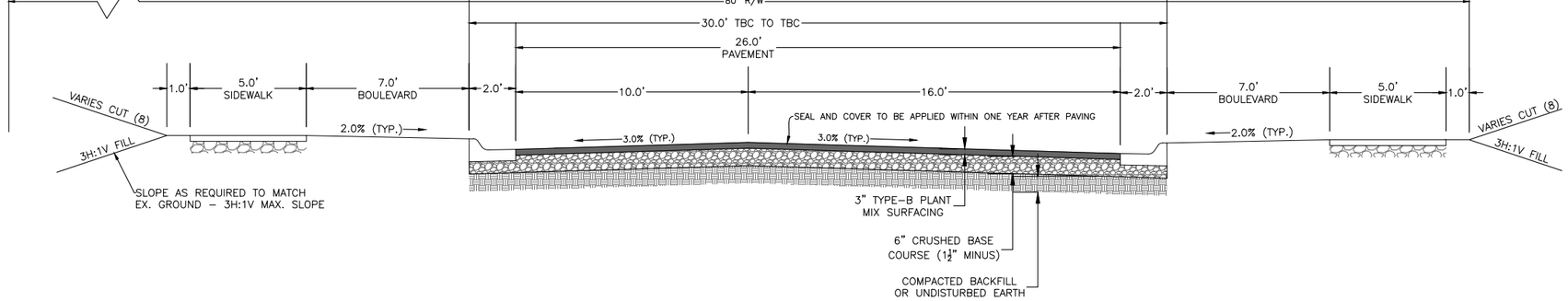

LOCAL ROAD - TYPICAL #4

SCALE 1" – 6'

HAUSER BLVD. (STA. 109+50 TO 110+40)

CITY OF HELENA ROAD CONSTRUCTION NOTES

1. ALL EXISTING SIGNAGE THAT IS DAMAGED OR REMOVED AS A RESULT OF CONSTRUCTION ACTIVITIES SHALL BE REPLACED BY THE CONTRACTOR AT THEIR OWN EXPENSE. ALL TRAFFIC CONTROL SIGNAGE SHALL BE INSTALLED IN ACCORDANCE WITH THE MANUAL ON UNIFORM TRAFFIC CONTROL DEVICES, LATEST EDITION.
2. CONTRACTOR SHALL HAVE SOLE RESPONSIBILITY TO RETURN ALL DISTURBED AREAS DUE TO CONSTRUCTION TO THEIR PRE–CONSTRUCTION STATE.
3. CONTRACTOR SHALL BUILD ALL ROADS TO THE 3% CROSS SLOPES INDICATED ON THE TYPICAL SECTIONS. IF NECESSARY, A TRANSITION FROM NEW PAVEMENT TO EXISTING GRAVEL ROAD MAY BE REQUIRED.
4. ALL WORK SHALL CONFORM WITH MONTANA PUBLIC WORKS STANDARD SPECIFICATIONS (MPWSS), CITY OF HELENA STANDARDS, AND THESE PLANS.
5. 6" OF CRUSHED AGGREGATE COARSE, COMPACTED TO 95% MAXIMUM DRY DENSITY WILL BE PROVIDED UNDER ALL SIDEWALKS AND SHARD–USE PATHS.
6. NATIVE SUBGRADE AND/OR FILL SHALL BE COMPACTED TO A STANDARD RELATIVE COMPACTION (AASHTO T99) OF AT LEAST 95 PERCENT.
7. BEFORE ANY FILL IS PLACED, THE TOP 8" OF NATIVE SUBGRADE WILL BE SCARIFIED, MOISTURE CONDITION, IF NECESSARY, AND COMPACTED TO AT LEAST 95% OF MAXIMUM DRY DENSITY. ALL FILL SHALL ALSO BE COMPACTED TO AT LEAST 95% OF MAXIMUM DRY DENSITY. IF UNSTABLE MATERIAL IS ENCOUNTERED AS DETERMINED BY THE ENGINEER, IT SHALL BE REMOVED AND REPLACED WITH IMPORTED MATERIAL MEETING MPWSS AND GEOTECHNICAL REPORT REQUIREMENTS.
8. CUT SLOPE IS 2H:1V WHEN CUT HEIGHT EXCEEDS 6 FEET, 2.5:1V WHEN CUT HEIGHT IS GREATER THAN 3 FEET AND LESS THAN OR EQUAL TO 6 FEET, AND 3H:1V WHEN CUT HEIGHT IS LESS THAN OR EQUAL TO 3 FEET.
9. SEAL AND COVER WILL BE APPLIED WITHIN ON YEAR AFTER PAVING

FOR REVIEW

NO.	REVISION DESCRIPTION	BY	DATE

PROJECT: 2023-07
DESIGNED: BJD
DRAWN: BJD
CHECKED: DDP
APPROVED: STH
DATE: FEB. 2025

MONTANA
DARYL DREW PEARSON
No. 62631ES
LICENSED PROFESSIONAL ENGINEER-LAND SURVEYOR

WWC ENGINEERING
1275 MAPLE STREET, SUITE F
HELENA, MT 59601
(406) 443-3962

SUSSEX DEVELOPMENT, INC.
WEST SIDE WOODS SUBDIVISION PHASE 1 & 2 OFFSITE ROAD IMPROVEMTNTS
TYPICAL ROAD SECTIONS - 2

SHEET NO.
7
OF 26

K:\Helena\ECO DEVELOPMENT LLC\2022292 West Side Subdivision 2nd Submittal\05CAD\Sheets\Phase 1\22292-ROAD-TYP.dwg

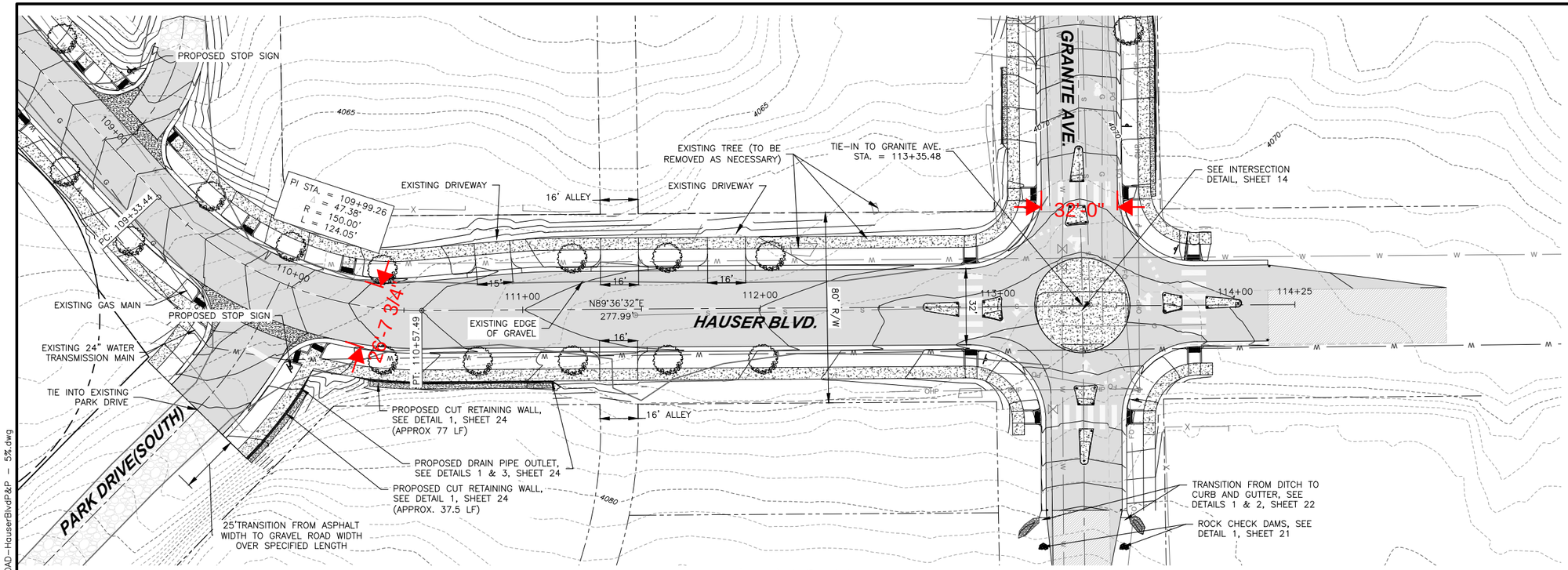

PLAN VIEW

0 25 50

SCALE IN FEET

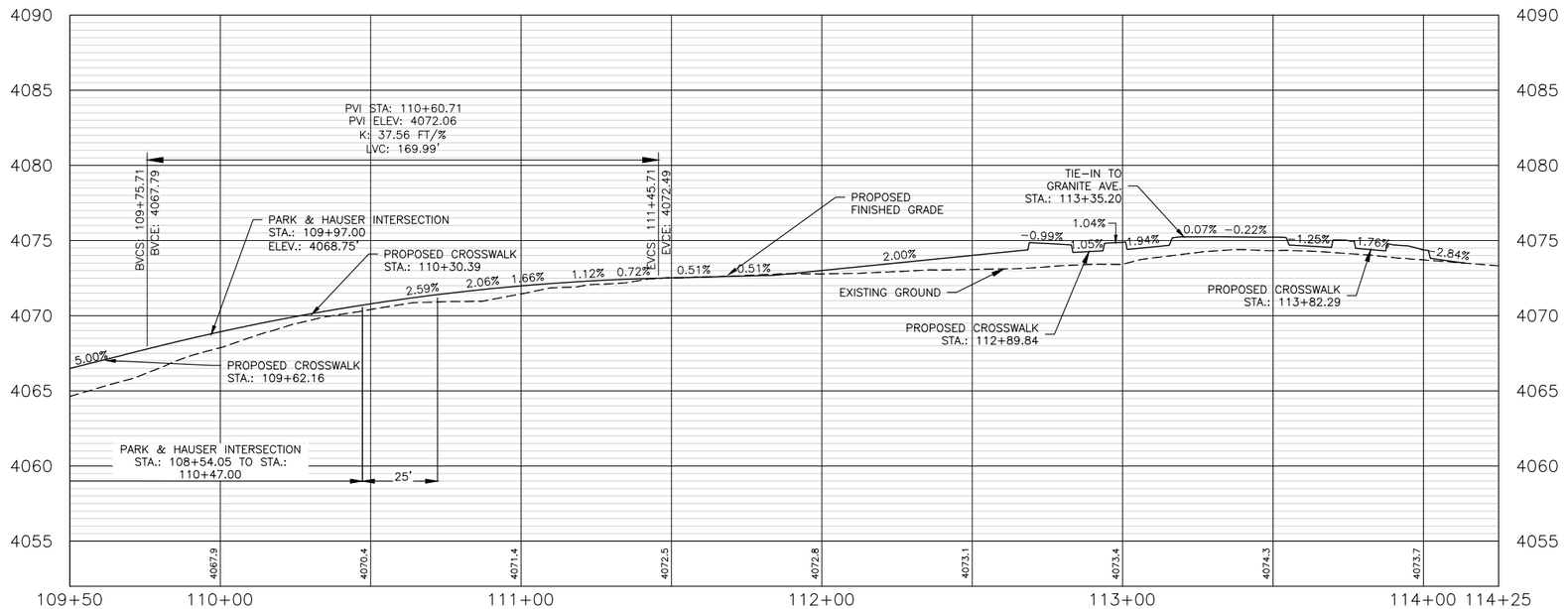

PROFILE VIEW

HORIZONTAL SCALE: 1" = 50'
VERTICAL SCALE: 1" = 10'

NOTE:

1. EXISTING MANHOLE WITHIN ROUNDABOUT TO BE RAISED TO PROPOSED GRADE (1.0'). SEE ROUNDABOUT PROFILE ON SHEET 10.
2. TREES SHOWN ON HAUSER BLVD. ARE CLASS II TREES (PER CITY OF HELENA ARBORICULTURAL STANDARDS) SPACED AT APPROXIMATELY 40'.
3. CONTRACTOR TO COORDINATE WITH LANDOWNER ON PERPETUATING APPROACH. PERPETUATED APPROACH MAY HAVE A MAXIMUM WIDTH OF 24'. APPROACH SHALL BE INSTALLED PER COH STANDARD DRAWING 5-6.
4. CONTRACTOR TO WORK WITH ADJACENT PROPERTY OWNERS TO INSTALL IRRIGATION WITHIN BOULEVARD IF REQUESTED.

FOR REVIEW

NO.	REVISION DESCRIPTION	BY	DATE

PROJECT: 2023-07
DESIGNED: BJD
DRAWN: BJD
CHECKED: DDP
APPROVED: STH
DATE: FEB. 2025

MONTANA
DARYL DREW PEARSON
No. 62631ES
LICENSED PROFESSIONAL ENGINEER-LAND SURVEYOR

WWC ENGINEERING
1275 MAPLE STREET, SUITE F
HELENA, MT 59601
(406) 443-3962

SUSSEX DEVELOPMENT, INC
WEST SIDE WOODS SUBDIVISION PHASE 1 & 2 OFFSITE ROAD IMPROVEMTNTS
HAUSER PLAN PROFILE - 1
STA. 109+50 TO STA. 114+25

SHEET NO.
8
OF 26

K:\Helena\ECO DEVELOPMENT LLC\2022292 West Side Subdivision 2nd Submittal\05CAD\Sheets\Phase 1\Roads\Off-site Roads\22292-ROAD-HauserBlvdP&P - 5%.dwg

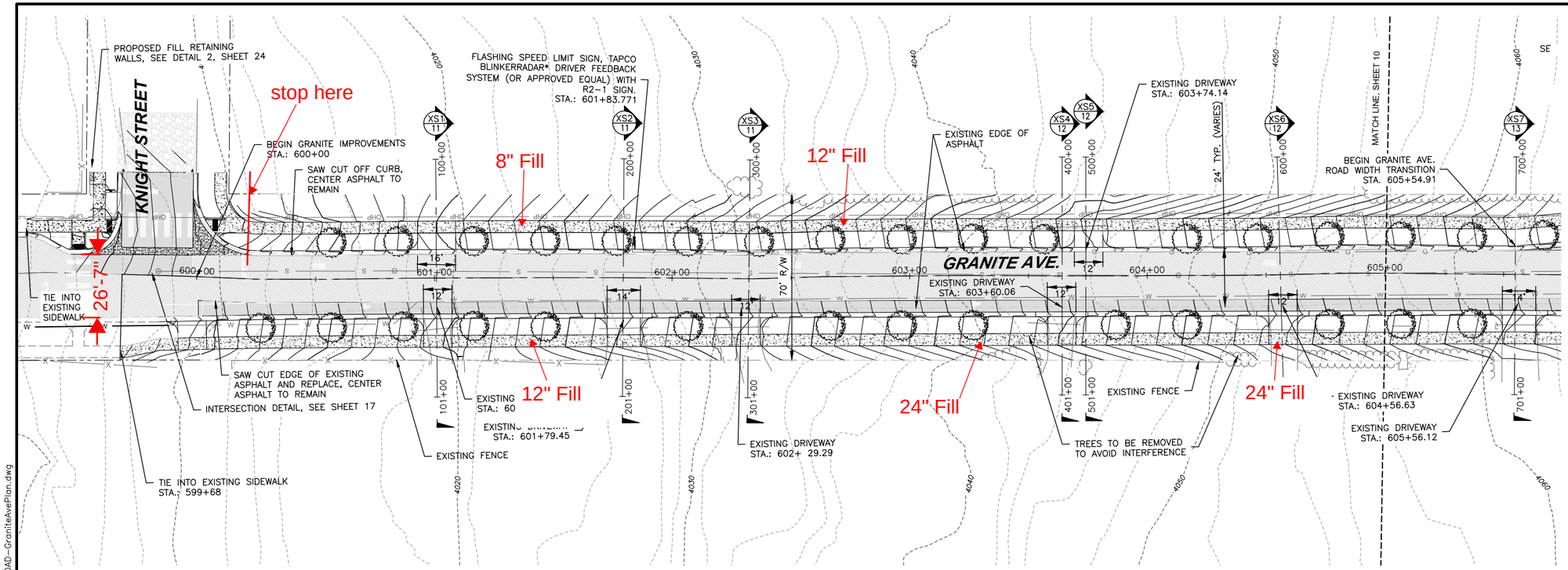

PLAN VIEW

0 25 50

SCALE IN FEET

NOTE:

1. MAILBOXES TO BE REMOVED AND RELOCATED, AS NECESSARY.
2. CONTRACTOR TO COORDINATE WITH ADJACENT PROPERTY OWNERS TO INSTALL IRRIGATION WITHIN BOULEVARD IF REQUESTED.
3. CONTRACTOR TO COORDINATE WITH LANDOWNERS PRIOR TO CONSTRUCTION ON PERPETUATING APPROACH. PERPETUATED APPROACH MAY HAVE A MAXIMUM WIDTH OF 24 FEET. INSTALL APPROACH PER COH STANDARD DRAWING 5-6.
4. TREES TO BE INSTALLED ALONG GRANITE AVENUE ARE TO BE CLASS I TREES SPACED AT APPROXIMATELY 30' PER CITY OF HELENA ARBORICULTURAL STANDARDS.
5. NEW DRIVEWAYS CONSTRUCTED ALONG GRANITE AVENUE THAT REPLACE EXISTING DRIVEWAY APPROACHES SHALL MEET R-2 ZONING REQUIREMENTS (12' MIN. WIDTH, 24' MAX. WIDTH)

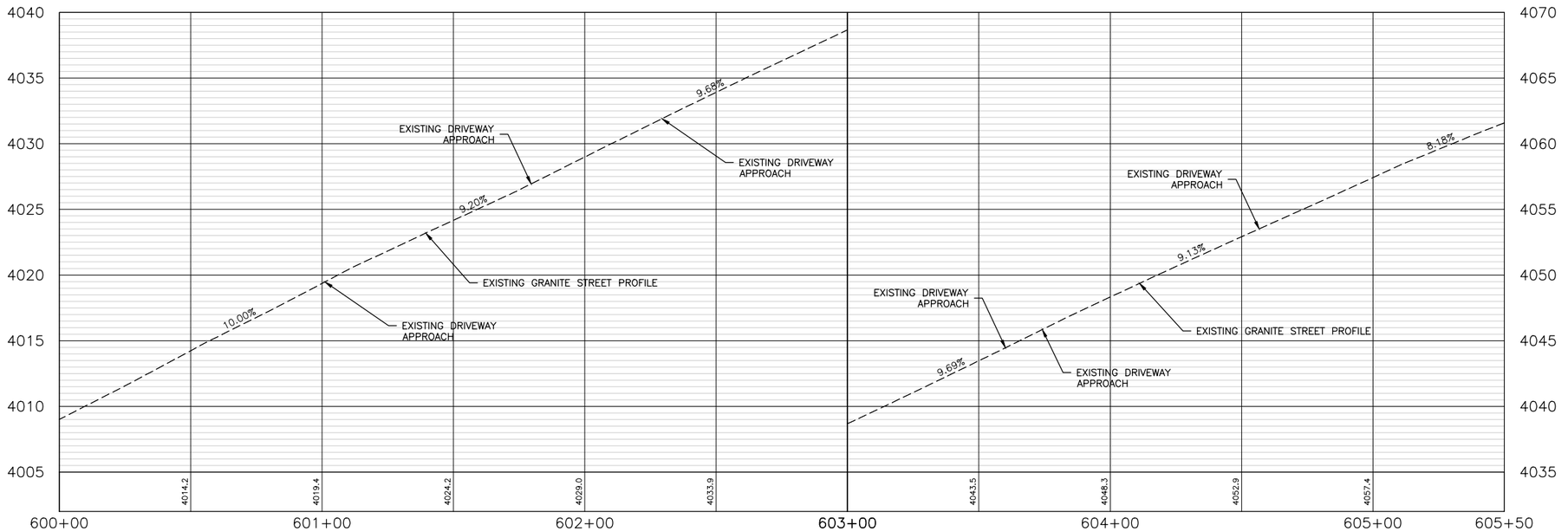

PROFILE VIEW

HORIZONTAL SCALE 1" = 50'
VERTICAL SCALE 1" = 10'

FOR REVIEW

NO.	REVISION DESCRIPTION	BY	DATE

PROJECT: 2023-07
DESIGNED: BJD
DRAWN: BJD
CHECKED: DDP
APPROVED: STH
DATE: FEB. 2025

MONTANA
DARYL DREW PEARSON
No. 62631ES
REGISTERED PROFESSIONAL ENGINEER - LAND SURVEYOR
LICENSED

WWC ENGINEERING
1275 MAPLE STREET, SUITE F
HELENA, MT 59601
(406) 443-3962

SUSSEX DEVELOPMENT, INC
WEST SIDE WOODS SUBDIVISION PHASE 1 & 2 OFFSITE ROAD IMPROVEMTNTS
GRANITE AVE PLAN PROFILE - 1
STA. 600+00 TO STA. 605+50

SHEET NO.
9
OF 26

K:\Helena\ECO DEVELOPMENT LLC\2022292 West Side Subdivision 2nd Submittal\05CAD\Sheets\Phase 1\Roads\Off-site Roads\22292-ROAD-GraniteAvePlan.dwg

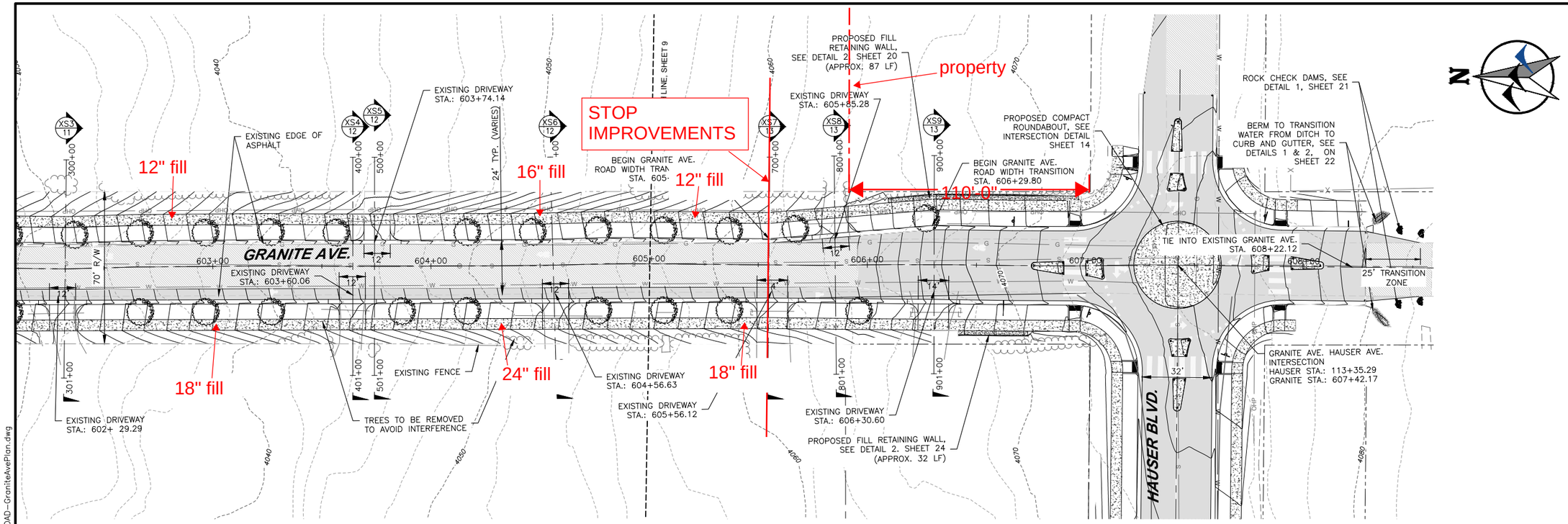

PLAN VIEW

0 25 50

SCALE IN FEET

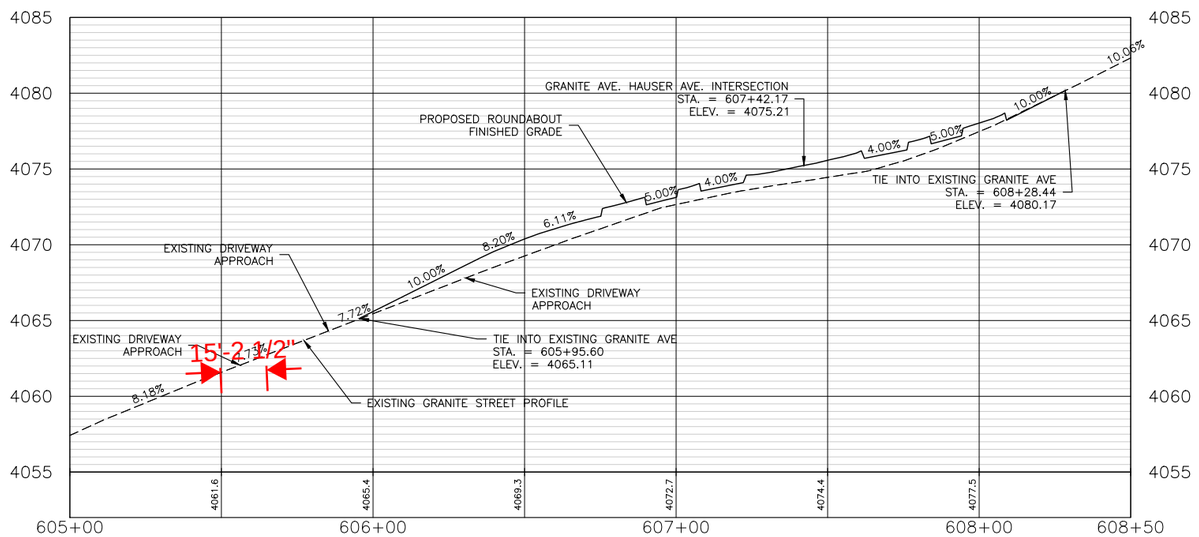

PROFILE VIEW

HORIZONTAL SCALE: 1" = 50'
VERTICAL SCALE: 1" = 10'

NOTE:
1. MAILBOXES TO BE REMOVED AND RELOCATED, AS NECESSARY.
2. CONTRACTOR TO COORDINATE WITH ADJACENT PROPERTY OWNERS TO INSTALL IRRIGATION WITHIN BOULEVARD IF REQUESTED.
3. CONTRACTOR TO COORDINATE WITH LANDOWNERS PRIOR TO BEGINNING CONSTRUCTION ON PERPETUATING APPROACH. PERPETUATED APPROACHES MAY HAVE A MAXIMUM WIDTH OF 24'. APPROACH TO BE INSTALLED PER COH STANDARD DRAWING 5-6.
4. TREES TO BE INSTALLED ALONG GRANITE AVENUE ARE TO BE CLASS I TREES SPACED AT APPROXIMATELY 30' PER CITY OF HELENA ARBORICULTURAL STANDARDS.
5. NEW DRIVEWAYS CONSTRUCTED ALONG GRANITE AVENUE THAT REPLACE EXISTING DRIVEWAY APPROACHES SHALL MEET R-2 ZONING REQUIREMENTS (12' MIN. WIDTH, 24' MAX. WIDTH).

FOR REVIEW

NO.	REVISION DESCRIPTION	BY	DATE

PROJECT: 2023-07
DESIGNED: BJD
DRAWN: BJD
CHECKED: DDP
APPROVED: STH
DATE: FEB. 2025

MONTANA
DARYL DREW PEARSON
No. 62631ES
LICENSED PROFESSIONAL ENGINEER-LAND SURVEYOR

WWC ENGINEERING
1275 MAPLE STREET, SUITE F
HELENA, MT 59601
(406) 443-3962

SUSSEX DEVELOPMENT, INC
WEST SIDE WOODS SUBDIVISION PHASE 1 & 2 OFFSITE ROAD IMPROVEMTNTS
GRANITE AVE PLAN PROFILE - 2
STA. 605+00 TO STA. 608+50

SHEET NO.
10
OF 26

K:\Helena\ECO DEVELOPMENT LLC\2022292 West Side Subdivision 2nd Submittal\05CAD\Sheets\Phase 1\Roads\Off-site Roads\22292-ROAD-GraniteAvePlan.dwg

NOTE:
DEVELOPER TO WORK WITH LANDOWNERS WITH PROPOSED DRIVEWAYS STEEPER THAN 10H:1V ON EXTENSION OF DRIVEWAY PAST PROPERTY LINE.

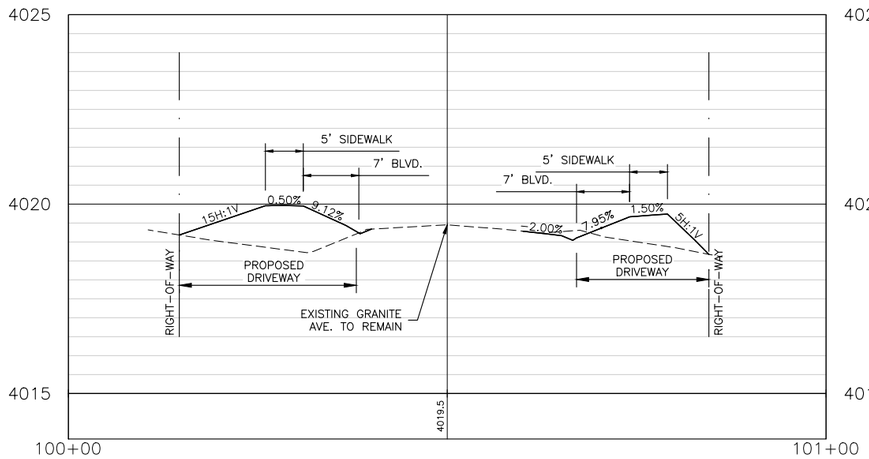

PROFILE VIEW XS-1 / 9
HORIZONTAL SCALE: 1" = 50'
VERTICAL SCALE: 1" = 10'

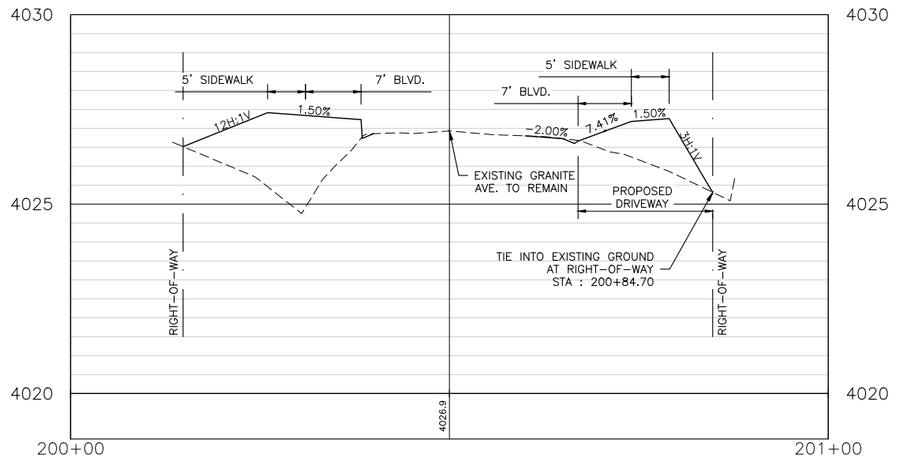

PROFILE VIEW XS-2 / 9
HORIZONTAL SCALE: 1" = 50'
VERTICAL SCALE: 1" = 10'

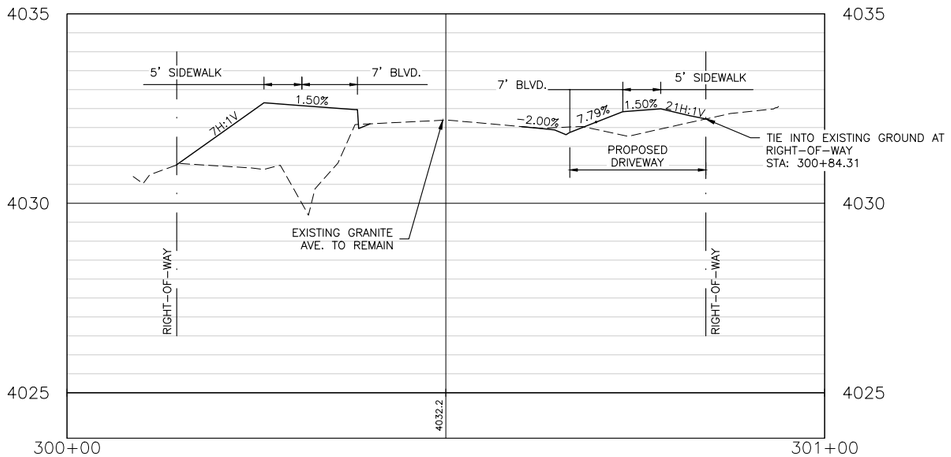

PROFILE VIEW XS-3 / 9
HORIZONTAL SCALE: 1" = 50'
VERTICAL SCALE: 1" = 10'

FOR REVIEW

NO.	REVISION DESCRIPTION	BY	DATE

PROJECT: 2023-07
DESIGNED: BJD
DRAWN: BJD
CHECKED: DDP
APPROVED: STH
DATE: FEB. 2025

MONTANA
DARYL DREW PEARSON
No. 62631ES
REGISTERED PROFESSIONAL ENGINEER-LAND SURVEYOR
LICENSED

WWC ENGINEERING
1275 MAPLE STREET, SUITE F
HELENA, MT 59601
(406) 443-3962

SUSSEX DEVELOPMENT, INC
WEST SIDE WOODS SUBDIVISION PHASE 1 & 2 OFFSITE ROAD IMPROVEMTNTS
APPROACH CROSS SECTIONS - 1

SHEET NO.
11
OF 26

K:\Helena\ECO DEVELOPMENT LLC\2022292 West Side Subdivision 2nd Submittal\05CAD\Sheets\Phase 1\Roads\Off-site Roads\22292-ROAD-GraniteAvePlan.dwg

NOTE:
DEVELOPER TO WORK WITH LANDOWNERS WITH PROPOSED DRIVEWAYS STEEPER THAN 10H:1V ON EXTENSION OF DRIVEWAY PAST PROPERTY LINE.

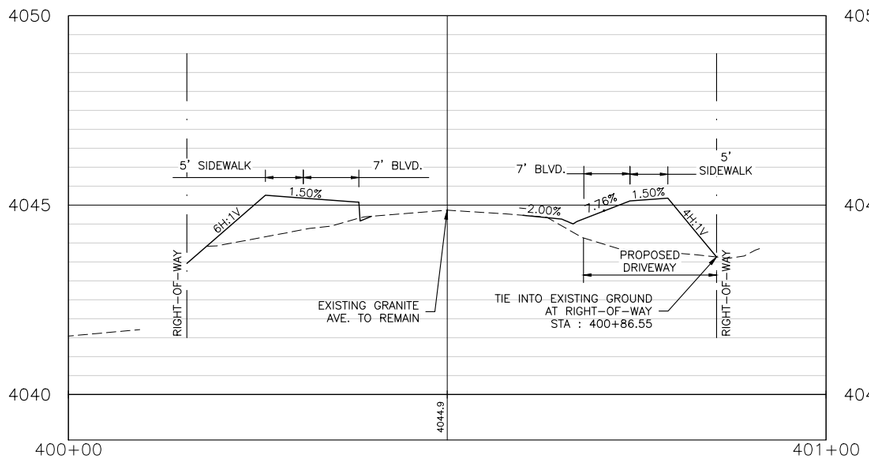

PROFILE VIEW XS-4 / 9
HORIZONTAL SCALE: 1" = 50'
VERTICAL SCALE: 1" = 10'

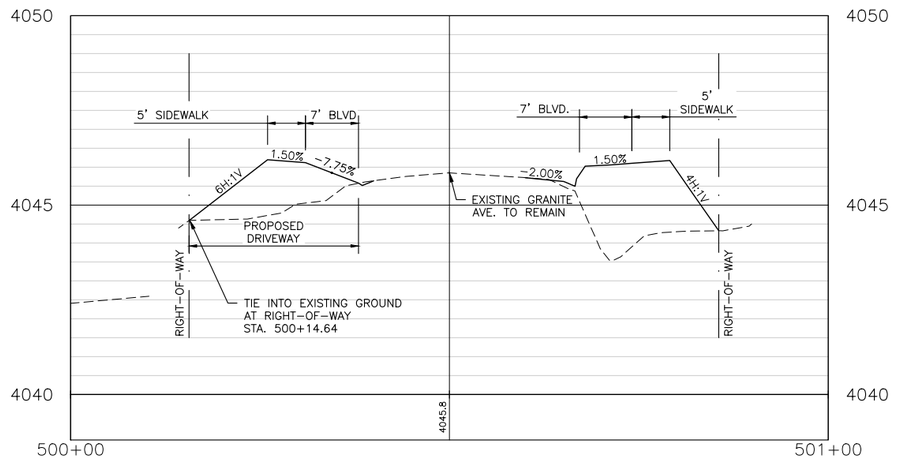

PROFILE VIEW XS-5 / 9
HORIZONTAL SCALE: 1" = 50'
VERTICAL SCALE: 1" = 10'

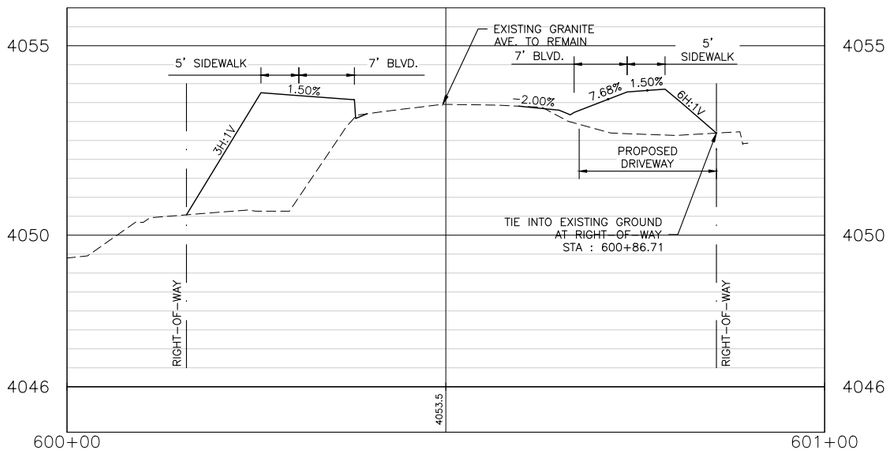

PROFILE VIEW XS-6 / 9
HORIZONTAL SCALE: 1" = 50'
VERTICAL SCALE: 1" = 10'

FOR REVIEW

NO.	REVISION DESCRIPTION	BY	DATE

PROJECT: 2023-07
DESIGNED: BJD
DRAWN: BJD
CHECKED: DDP
APPROVED: STH
DATE: FEB. 2025

MONTANA
DARYL DREW PEARSON
No. 62631ES
PROFESSIONAL ENGINEER-LAND SURVEYOR
LICENSED

WWC ENGINEERING
1275 MAPLE STREET, SUITE F
HELENA, MT 59601
(406) 443-3962

SUSSEX DEVELOPMENT, INC
WEST SIDE WOODS SUBDIVISION PHASE 1 & 2 OFFSITE ROAD IMPROVEMTNTS
APPROACH CROSS SECTIONS - 2

SHEET NO.
12
OF 26

K:\Helena\ECO DEVELOPMENT LLC\2022292 West Side Subdivision 2nd Submittal\05CAD\Sheets\Phase 1\Roads\Off-site Roads\22292-ROAD-GraniteAvePlan.dwg

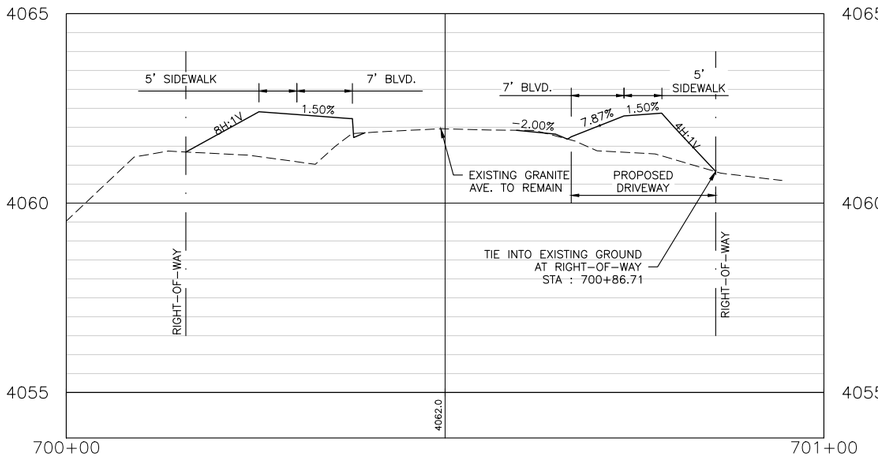

PROFILE VIEW XS-7

HORIZONTAL SCALE: 1" = 50'
VERTICAL SCALE: 1" = 10'

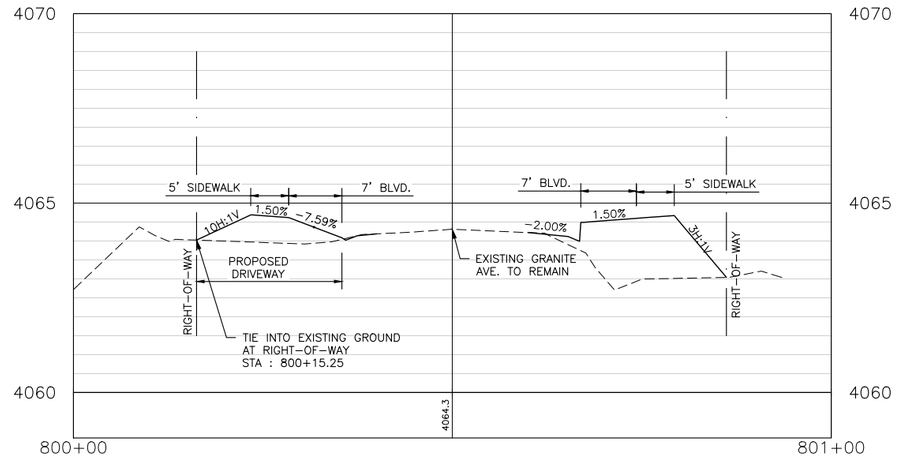

PROFILE VIEW XS-8

HORIZONTAL SCALE: 1" = 50'
VERTICAL SCALE: 1" = 10'

NOTE:
DEVELOPER TO WORK WITH LANDOWNERS WITH PROPOSED DRIVEWAYS STEEPER THAN 10H:1V ON EXTENSION OF DRIVEWAY PAST PROPERTY LINE.

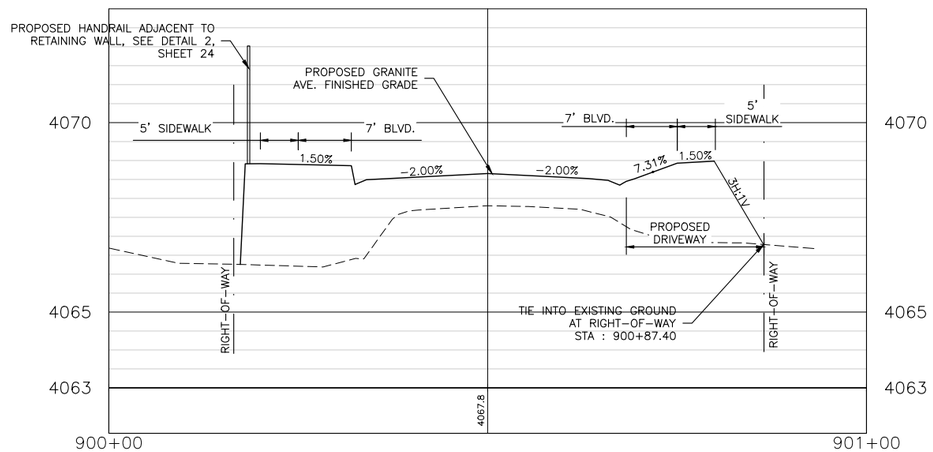

PROFILE VIEW XS-9

HORIZONTAL SCALE: 1" = 50'
VERTICAL SCALE: 1" = 10'

FOR REVIEW

NO.	REVISION DESCRIPTION	BY	DATE

PROJECT: 2023-07
DESIGNED: BJD
DRAWN: BJD
CHECKED: DDP
APPROVED: STH
DATE: FEB. 2025

MONTANA
DARYL DREW PEARSON
No. 62631ES
PROFESSIONAL ENGINEER - LAND SURVEYOR
LICENSED

WWC ENGINEERING
1275 MAPLE STREET, SUITE F
HELENA, MT 59601
(406) 443-3962

SUSSEX DEVELOPMENT, INC
WEST SIDE WOODS SUBDIVISION PHASE 1 & 2 OFFSITE ROAD IMPROVEMTNTS
APPROACH CROSS SECTIONS - 3

SHEET NO.
13
OF 26

K:\Helena\ECO DEVELOPMENT LLC\2022292 West Side Subdivision 2nd Submittal\05CAD\Sheets\Phase 1\Roads\Off-site Roads\22292-ROAD-GraniteAvePlan.dwg

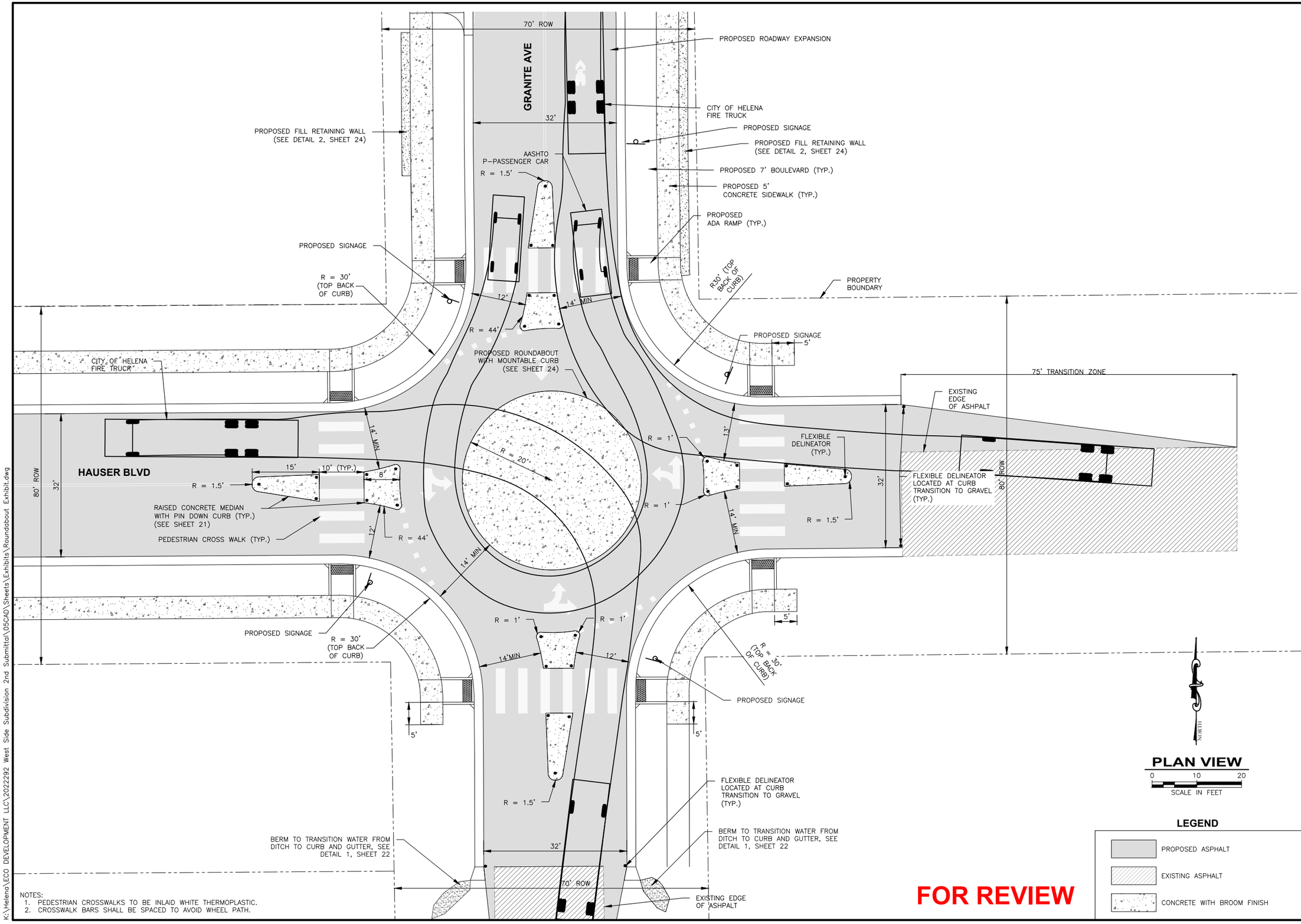

PLAN VIEW

0 10 20

SCALE IN FEET

NOTES:
1. PEDESTRIAN CROSSWALKS TO BE INLAID WHITE THERMOPLASTIC.
2. CROSSWALK BARS SHALL BE SPACED TO AVOID WHEEL PATH.

LEGEND

- PROPOSED ASPHALT
- EXISTING ASPHALT
- CONCRETE WITH BROOM FINISH

FOR REVIEW

NO.	REVISION DESCRIPTION	BY	DATE

PROJECT: 2023-07
DESIGNED: DDP
DRAWN: VG
CHECKED: DDP
APPROVED: STH
DATE: FEB. 2025

MONTANA LICENSED PROFESSIONAL ENGINEER - LAND SURVEYOR
DARYL DREW PEARSON
No. 62631ES

WWC ENGINEERING
1275 MAPLE STREET, SUITE F
HELENA, MT 59601
(406) 443-3962

SUSSEX DEVELOPMENT, INC
WEST SIDE WOODS SUBDIVISION PHASE 1 & 2 OFFSITE ROAD IMPROVEMTNTS
GRANITE & HAUSER ROUNDABOUT DETAIL

SHEET NO.
14
OF 26

K:\Helena\ECO DEVELOPMENT LLC\2022292 West Side Subdivision 2nd Submittal\05CAD\Sheets\Exhibits\Roundabout Exhibit.dwg

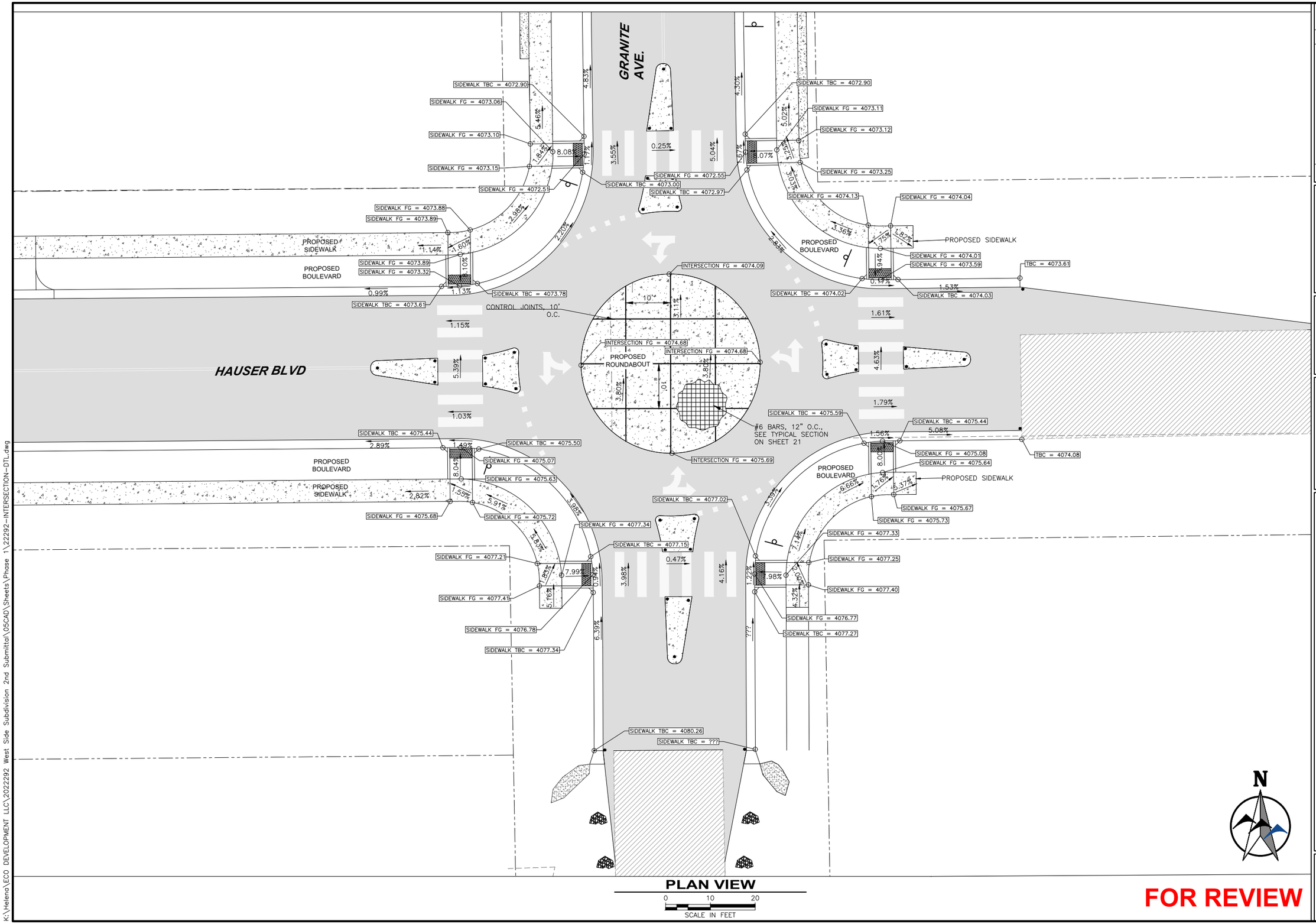

NO.	REVISION DESCRIPTION	BY	DATE

PROJECT: 2023-07
DESIGNED: BJD
DRAWN: BJD
CHECKED: DDP
APPROVED: STH
DATE: FEB. 2025

MONTANA
DARYL DREW PEARSON
No. 62631ES
LICENSED PROFESSIONAL ENGINEER - LAND SURVEYOR

WWC ENGINEERING
1275 MAPLE STREET, SUITE F
HELENA, MT 59601
(406) 443-3962

SUSSEX DEVELOPMENT, INC
WEST SIDE WOODS SUBDIVISION PHASE 1 & 2 OFFSITE ROAD IMPROVEMTNTS

GRANITE & HAUSER
INTERSECTION DETAIL

SHEET NO.
15
OF 26

K:\Helena\ECO DEVELOPMENT LLC\2022292 West Side Subdivision 2nd Submittal\05CAD\Sheets\Phase 1\22292-INTERSECTION-DTL.dwg

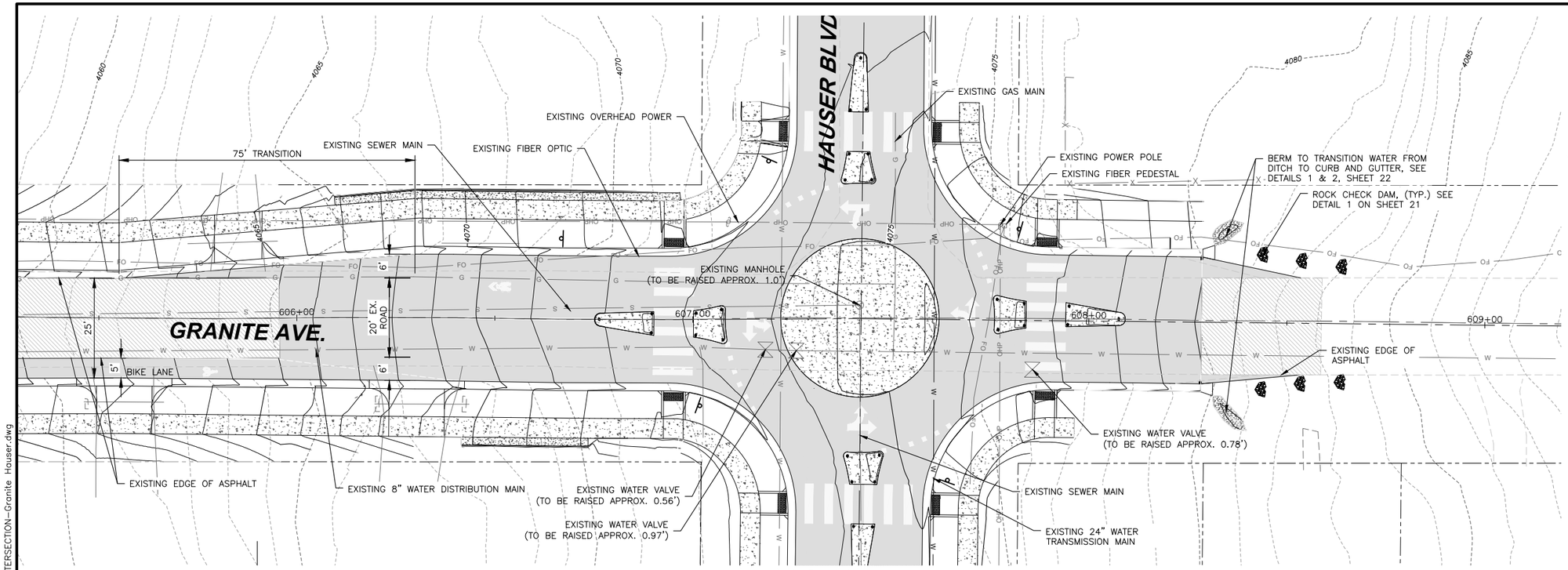

PLAN VIEW

0 15 30

SCALE IN FEET

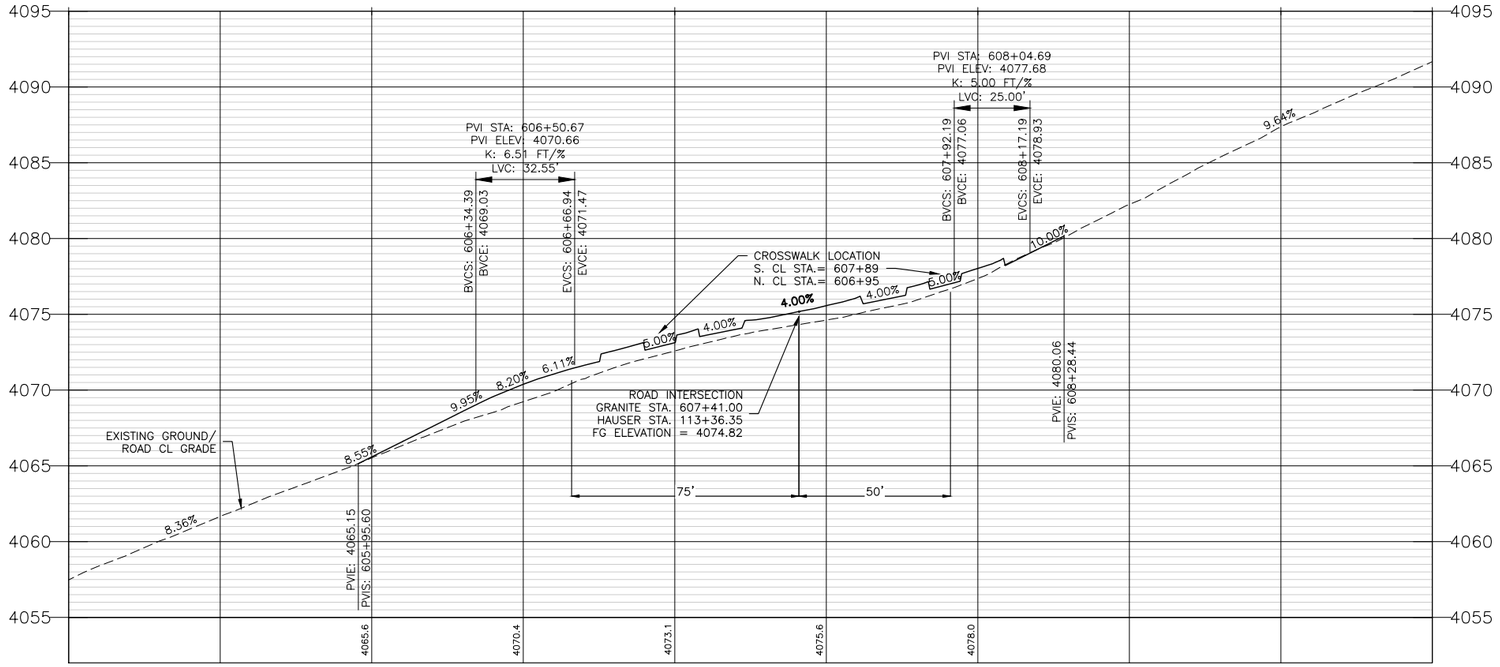

PROFILE VIEW

HORIZONTAL SCALE: 1" = 50'
VERTICAL SCALE: 1" = 10'

NOTES:
1. EXISTING MANHOLE RIM TO BE RAISED TO MATCH PROPOSED FINISHED GRADE AS REQUIRED (APPROX. 1.0')

FOR REVIEW

NO.	REVISION DESCRIPTION	BY	DATE

PROJECT: 2023-07
DESIGNED: BJD
DRAWN: VG
CHECKED: DDP
APPROVED: STH
DATE: FEB. 2025

MONTANA
DARYL DREW PEARSON
No. 62631ES
LICENSED PROFESSIONAL ENGINEER-LAND SURVEYOR

WWC ENGINEERING
1275 MAPLE STREET, SUITE F
HELENA, MT 59601
(406) 443-3962

SUSSEX DEVELOPMENT, INC
WEST SIDE WOODS SUBDIVISION PHASE 1 & 2 OFFSITE ROAD IMPROVEMTNTS
GRANITE & HAUSER INTERSECTION PLAN AND PROFILE
STA. 605+00 TO STA. 609+50

SHEET NO.
16
OF 26

K:\Helena\ECO DEVELOPMENT LLC\2022292 West Side Subdivision 2nd Submittal\05CAD\Sheets\Phase 1\Roads\Off-site Roads\22292-INTERSECTION-Granite Hauser.dwg

NOTES:
1. CURB RADII ARE FOR BACK OF CURB UNLESS OTHERWISE INDICATED.
2. PEDESTRIAN CROSSWALKS TO BE INLAID WHITE THERMOPLASTIC.
3. CROSSWALK BARS SHALL BE SPACED TO AVOID WHEEL PATH.

SIDEWALK FG = 4002.03
SIDEWALK FG = 4001.85
3' TRANSITION
SIDEWALK FG = 4002.41
TIE INTO EXISTING SIDEWALK AND CURB
YIELD BAR
MATCH EXISTING GRADE
EXISTING CURB AND GUTTER
9.74%
16.00%
EOA ELEV. = 4003.41
EOA ELEV. = 4003.74
EOA ELEV. = 4003.76
EOA ELEV. = 4003.84
SIDEWALK FG = 4004.06
SIDEWALK FG = 4004.11
SIDEWALK FG = 4004.42
SIDEWALK FG = 4004.49
5.06%
1.78%
1.44%
5'
8.44'
R21'
11' FILL RETAINING WALL, SEE DETAIL 2, SHEET 24
9.88%
PROPOSED SIDEWALK
R12'
2.10%
SIDEWALK FG = 4004.49
SIDEWALK FG = 4004.56
TRANSITION AREA FOR ADA RAMP AND VALLEY GUTTER ON GRANITE STREET
5.82%
7.95%
PROPOSED STOP SIGN (R1-1)
R20'
EOA ELEV. = 4005.07
5' BOULEVARD
FUTURE CURB AND SIDEWALK EXTENSION
SIDEWALK FG = 4006.90
SIDEWALK FG = 4006.54
EOA ELEV. = 4005.47
EOA ELEV. = 4005.48
1.56%
25' TRANSITION ZONE
1.23%
10.56'
TIE INTO EXISTING SIDEWALK
EOA ELEV. = 4004.84
EOA ELEV. = 4004.95
EOA ELEV. = 4006.08
STOP BAR
PROPOSED VALLEY GUTTER
EOA ELEV. = 4007.50
1.48%
9.52%
30'
60' R.O.W.
EOA ELEV. = 4007.52
GRANITE AVE.
KNIGHT STREET
END KNIGHT STREET IMPROVEMENTS
EOA ELEV. = 4008.88
FLEXIBLE DELINEATOR LOCATED AT CURB TRANSITION TO GRAVEL (TYP.)
EOA ELEV. = 4008.92
0.69%
13.68'
EOA ELEV. = 4008.83
EOA ELEV. = 4008.75
12'
PROPOSED ALLEY ACCESS
EOA ELEV. = 4008.76
6.46'
2.29%
7' BOULEVARD
EOA ELEV. = 4009.27
0.40%
EOA ELEV. = 4009.29
FUTURE CURB AND SIDEWALK EXTENSION
SIDEWALK FG = 4009.44
5.8'
PROPOSED SIDEWALK
0.93%
SIDEWALK FG = 4009.49
22.44'
0.00%
1.45%
R25'
EOA ELEV. = 4010.29
YIELD BAR
SIDEWALK FG = 4009.62
SIDEWALK FG = 4010.04
MATCH EXISTING GRADE

N

PLAN VIEW
0 5 10
SCALE IN FEET

FOR REVIEW

NO.	REVISION DESCRIPTION	BY	DATE

PROJECT: 2023-07
DESIGNED: BJD
DRAWN: BJD
CHECKED: DDP
APPROVED: STH
DATE: FEB. 2025

MONTANA
DARYL DREW PEARSON
No. 62631ES
LICENSED PROFESSIONAL ENGINEER-LAND SURVEYOR

WWC ENGINEERING
1275 MAPLE STREET, SUITE F
HELENA, MT 59601
(406) 443-3962

SUSSEX DEVELOPMENT, INC
WEST SIDE WOODS SUBDIVISION PHASE 1 & 2 OFFSITE ROAD IMPROVEMTNTS
GRANITE & KNIGHT INTERSECTION DETAIL

SHEET NO.
17
OF 26

K:\Helena\ECO DEVELOPMENT LLC\2022292 West Side Subdivision 2nd Submittal\05CAD\Sheets\Phase 1\22292-INTERSECTION-DTL.dwg

RRFB CROSSWALK SYSTEM, BY TAPCO (OR APPROVED EQUAL)

PROPOSED LIGHT POLE, LOCATION TO BE COORDINATED WITH NORTHWESTERN ENERGY

EXISTING CROSSWALK STRIPING

EXISTING SIDEWALK

EXISTING CURB AND GUTTER

OHP

OVERLOOK BLVD.

GRANITE AVE.

N

PLAN VIEW

0 5 10

SCALE IN FEET

FOR REVIEW

K:\Helena\ECO DEVELOPMENT LLC\2022292 West Side Subdivision 2nd Submittal\05CAD\Sheets\Phase 1\22292-INTERSECTION-DTL.dwg

NO.	REVISION DESCRIPTION	BY	DATE
1			
2			
3			
4			
5			
6			

PROJECT: 2023-07
DESIGNED: BJD
DRAWN: BJD
CHECKED: DDP
APPROVED: STH
DATE: FEB. 2025

MONTANA
DARYL DREW PEARSON
No. 62631ES
LICENSED PROFESSIONAL ENGINEER-LAND SURVEYOR

WWC ENGINEERING
1275 MAPLE STREET, SUITE F
HELENA, MT 59601
(406) 443-3962

SUSSEX DEVELOPMENT, INC
WEST SIDE WOODS SUBDIVISION PHASE 1 & 2 OFFSITE ROAD IMPROVEMTNTS
GRANITE & OVERLOOK INTERSECTION

SHEET NO.
18
OF 26

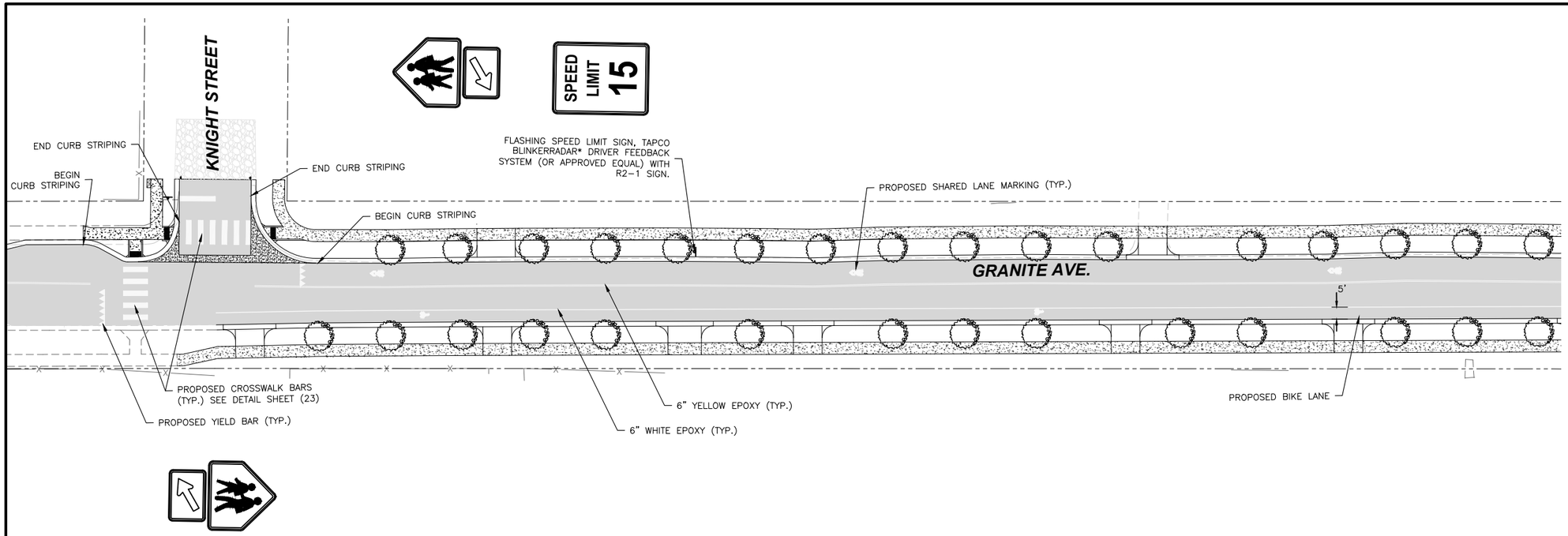

NOTE:
1. ALL ROAD STRIPING AND PEDESTRIAN CROSSWALK BARS TO BE INLAID WHITE THERMOPLASTIC.
2. PEDESTRIAN CROSSWALK BARS TO BE SPACED TO AVOID WHEEL PATH.
3. CENTERLINE STRIPING SHALL BE YELLOW AND HAVE A BREAK THROUGH INTERSECTIONS.
4. CURB STRIPING SHALL BE YELLOW EPOXY AND HAVE A BREAK WHEN INTERSECTING ADA RAMPS. CURB STRIPING IS TO COVER ENTIRE FACE AND TOP OF CURB.

N

PLAN VIEW

0 25 50

SCALE IN FEET

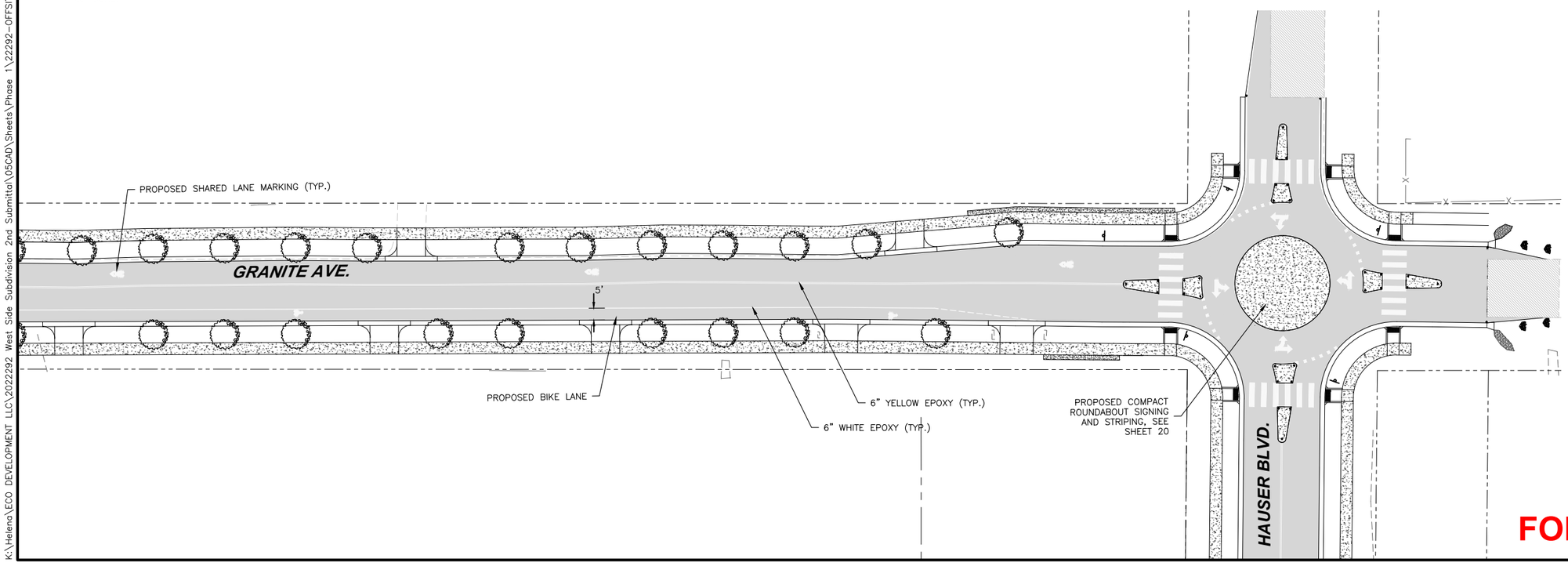

FOR REVIEW

NO.	REVISION DESCRIPTION	BY	DATE

PROJECT: 2023-07
DESIGNED: BJD
DRAWN: BJD
CHECKED: DDP
APPROVED: STH
DATE: FEB. 2025

MONTANA
DARYL DREW PEARSON
No. 62631ES
LICENSED PROFESSIONAL ENGINEER-LAND SURVEYOR

WWC ENGINEERING
1275 MAPLE STREET, SUITE F
HELENA, MT 59601
(406) 443-3962

SUSSEX DEVELOPMENT, INC
WEST SIDE WOODS SUBDIVISION PHASE 1 & 2 OFFSITE ROAD IMPROVEMTNTS
GRANITE AVENUE SIGNAGE AND STRIPING

SHEET NO.
19
OF 26

K:\Helena\ECO DEVELOPMENT LLC\2022292 West Side Subdivision 2nd Submittal\05CAD\Sheets\Phase 1\22292-OFFSITE-ROAD-SIGN.dwg

NOTE:
1. ALL ROAD STRIPING AND PEDESTRIAN CROSSWALK BARS TO BE INLAID WHITE THERMOPLASTIC.
2. PEDESTRIAN CROSSWALK BARS TO BE SPACED TO AVOID WHEEL PATH.
3. CENTERLINE STRIPING SHALL BE YELLOW AND HAVE A BREAK THROUGH INTERSECTIONS.
4. CURB STRIPING SHALL BE YELLOW EPOXY AND HAVE A BREAK WHEN INTERSECTING ADA RAMPS. CURB STRIPING IS TO COVER ENTIRE FACE AND TOP OF CURB.

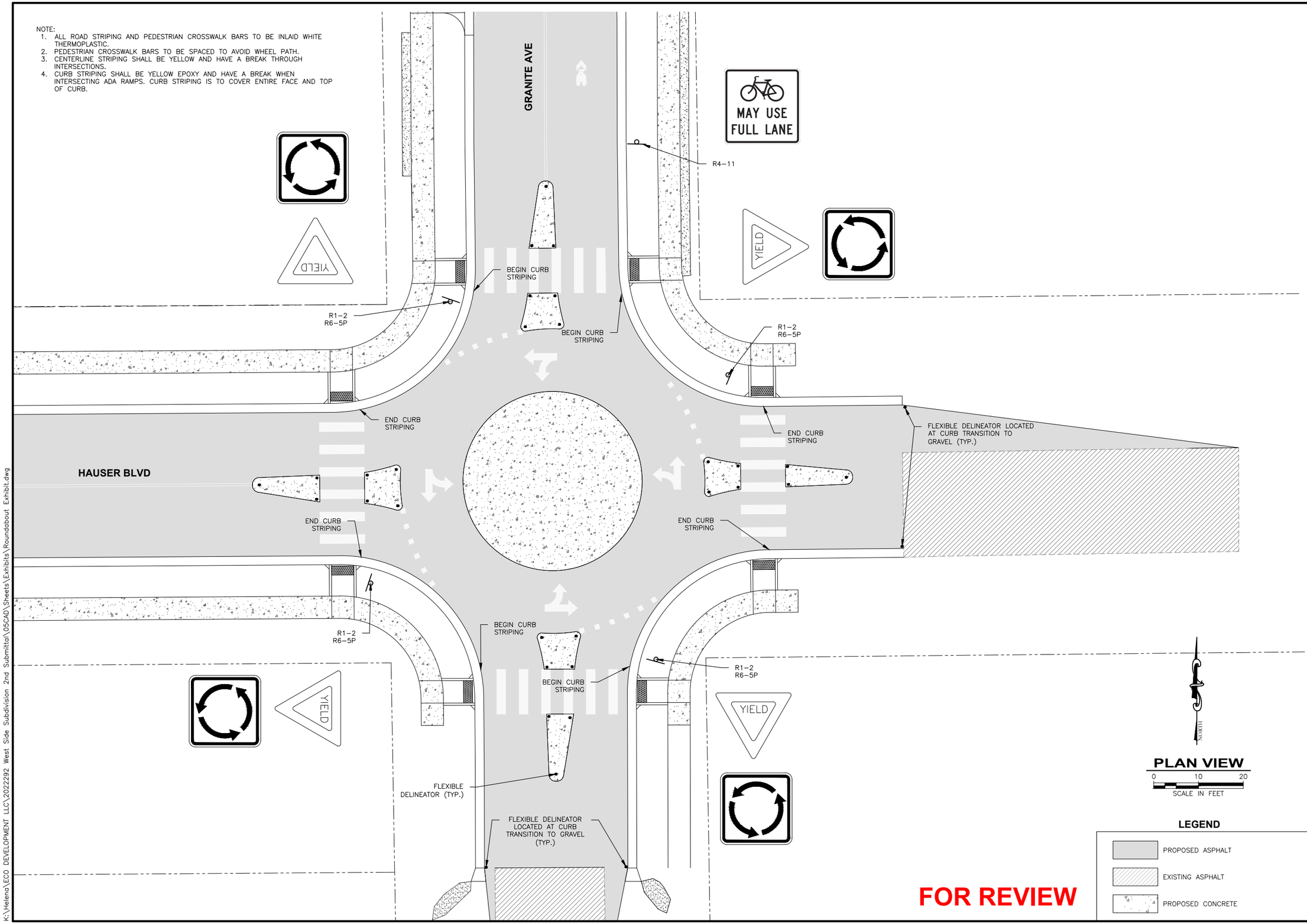

PLAN VIEW
0 10 20
SCALE IN FEET

LEGEND
- PROPOSED ASPHALT
- EXISTING ASPHALT
- PROPOSED CONCRETE

FOR REVIEW

NO.	REVISION DESCRIPTION	BY	DATE

PROJECT: 2023-07
DESIGNED: DDP
DRAWN: VG
CHECKED: DDP
APPROVED: STH
DATE: FEB. 2025

MONTANA
DARYL DREW PEARSON
No. 62631ES
LICENSED PROFESSIONAL ENGINEER-LAND SURVEYOR

WWC ENGINEERING
1275 MAPLE STREET, SUITE F
HELENA, MT 59601
(406) 443-3962

SUSSEX DEVELOPMENT, INC
WEST SIDE WOODS SUBDIVISION PHASE 1 & 2 OFFSITE ROAD IMPROVEMTNTS
ROUNDABOUT SIGNING AND STRIPING

SHEET NO.
20
OF 26

K:\Helena\ECO DEVELOPMENT LLC\2022292 West Side Subdivision 2nd Submittal\05CAD\Sheets\Exhibits\Roundabout Exhibit.dwg

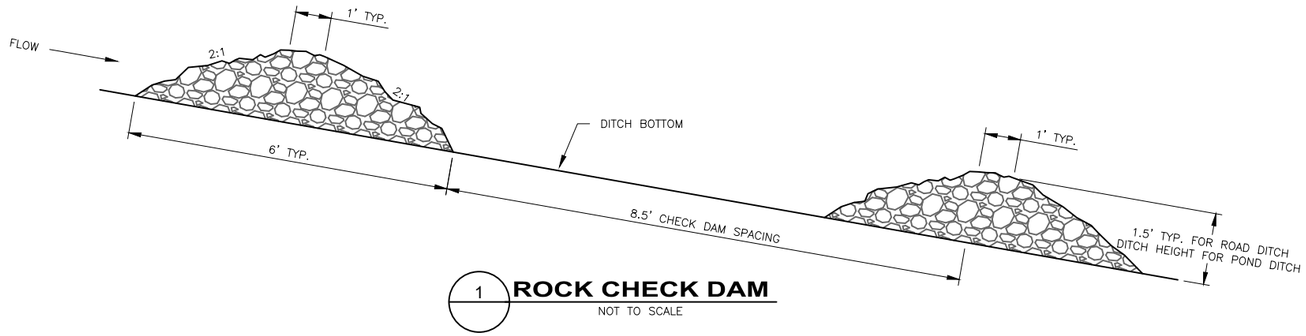

1 ROCK CHECK DAM
NOT TO SCALE

NOTES:

PLACE CHECK DAMS AT A DISTANCE THAT WILL ALLOW SMALL POOLS TO BE FORMED BEHIND EACH DAM. INSTALL THE FIRST CHECK DAM APPROXIMATELY 15 FT. FROM THE OUTFALL DEVICE. PLACE MULTIPLE CHECK DAMS SUCH THAT BACKWATER FROM THE DOWNSTREAM DAM WILL REACH THE TOE OF THE UPSTREAM DAM. ROCK MAY BE PLACED BY HAND OR BY MECHANICAL METHOD TO ACHIEVE COMPLETE DITCH OR SWALE COVERAGE.

CHECK DAMS CONSTRUCTED FROM GRAVEL MUST BE 100% PASSING THE 2 INCH SCREEN AND 10% MAXIMUM PASSING THE NO. 4 SIEVE. DAM MATERIAL MAY BE PITRUN OR CRUSHED AGGREGATE.

REMOVE SEDIMENT FROM BEHIND CHECK DAMS WHEN IT ACCUMULATES TO ONE-HALF THE ORIGINAL HEIGHT UNLESS ITS DRAINAGE AREA HAS BEEN STABILIZED.

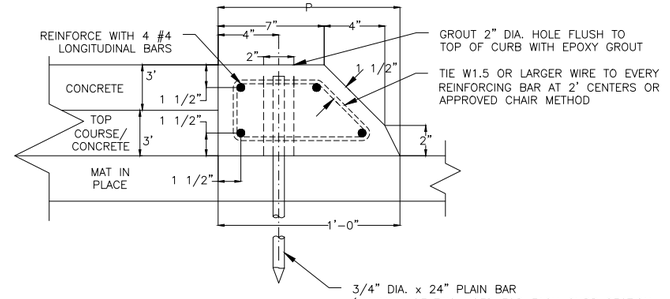

QUANTITIES (FOR ESTIMATING PURPOSED ONLY):
CONCRETE = 0.015 C.Y. PER 1.0' OF CURB
REINF. STEEL = 2.7 LB. PER 1.0' OF CURB

2 SPLITTER ISLAND - PIN DOWN CURB DETAIL
NOT TO SCALE

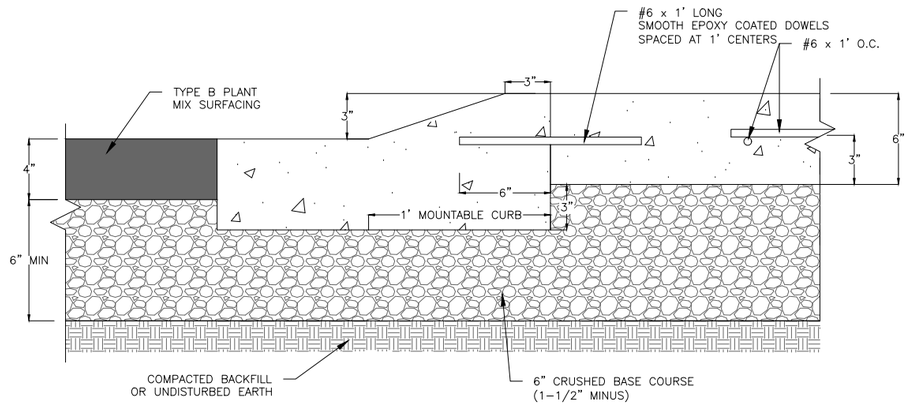

ROLL OVER CURB CONSTRUCTION:

1. CURBS MAY BE CONSTRUCTED USING ANY OF THE FOLLOWING TWO METHODS:
   (1) CAST IN PLACE
   (2) CONSTRUCTED BY THE USE OF AN APPROVED CURB FORMING OR SLIP FORM MACHINE
2. WHEN USING METHOD (2), REINFORCING STEEL IS NOT REQUIRED, WITH THE EXCEPTION OF THE PINS. SCORE OR SAW CUT CURBS TO A DEPTH OF 1" TO FORM CONTRACTION JOINTS AT 10 FT. OR LESS. EXTEND 1/2" MIN. WIDTH EXPANSION JOINTS COMPLETELY THROUGH CURB EVERY 100 FT. (+/- 30 FT.), AT INTERVALS EQUAL TO THE NEAREST MULTIPLE OF THE CONTRACTION JOINT INTERVAL AND FILL WITH PREFORMED EXPANSION JOINT.
3. FORM PRECAST CURBS IN THEIR INVERTED POSITION, IN LENGTHS NOT LESS THAN 4 FT, OR MORE THAN 10 FT.

MATERIAL

1. CONSTRUCT CURBS WITH M-4500, WITH A MAXIMUM ALLOWABLE WATER CEMENT (W/C) OF 0.45 PER MPWSS 2.1.A.1., OR AN APPROVED EQUIVALENT MIX.

2. EPOXY BINDER FOR GROUTING MUST MEET THE REQUIREMENTS OF (AASHTO 3 235) (ASTM C 881).

ASPHALT

1. ASPHALT SURROUNDING THE CENTER ISLAND WITHIN THE ROUNDABOUT TO BE 3" THICK, LAID IN 1 LIFT.
2. ASPHALT BINDER TO BE PG 58-28.

4 CENTER ISLAND MOUNTABLE CURB
NOT TO SCALE

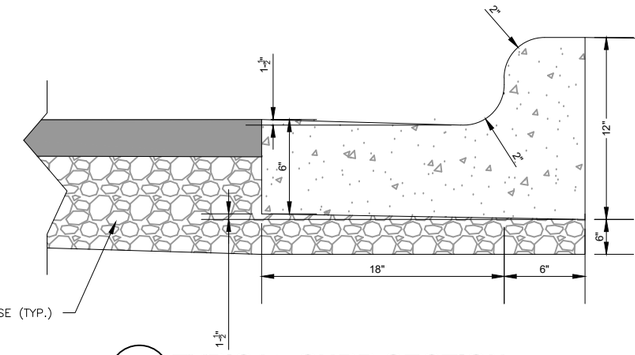

CURB / SIDEWALK NOTES:
1. 1" DEEP CONTRACTION JOINT PLACED AT 10' MAXIMUM INTERVALS. GROVES ARE CONTINUOUS ON THE TOP EXPOSED SURFACE FOR THE WIDTH OF THE CURB AND GUTTER.

1" MINUS CRUSHED BASE COURSE (TYP.)

3 TYPICAL CURB SECTION
NOT TO SCALE

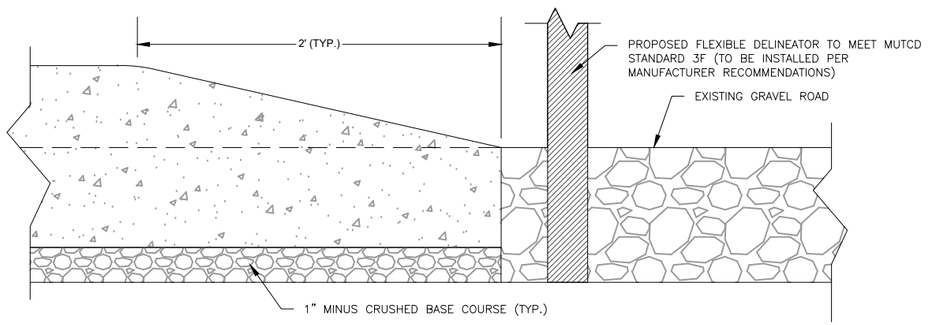

5 CURB TRANSITION TO GRAVEL ROAD PROFILE
NOT TO SCALE

CURB TRANSITION NOTE:

1. FLEXIBLE DELINEATORS TO BE INSTALLED AT THE END OF EACH CURB TRANSITION TO GRAVEL.

FOR REVIEW

NO.	REVISION DESCRIPTION	BY	DATE

PROJECT: 2023-07
DESIGNED: DDP
DRAWN: VG
CHECKED: DDP
APPROVED: STH
DATE: FEB. 2025

MONTANA
DARYL DREW PEARSON
No. 62631ES
LICENSED PROFESSIONAL ENGINEER-LAND SURVEYOR

WWC ENGINEERING
1275 MAPLE STREET, SUITE F
HELENA, MT 59601
(406) 443-3962

SUSSEX DEVELOPMENT, INC.
WEST SIDE WOODS SUBDIVISION PHASE 1 & 2 OFFSITE ROAD IMPROVEMTNTS
DETAILS

SHEET NO.
21
OF 26

K:\Helena\ECO DEVELOPMENT LLC\2022292 West Side Subdivision 2nd Submittal\05CAD\Sheets\Phase 1\22292-DETL-CURB.dwg

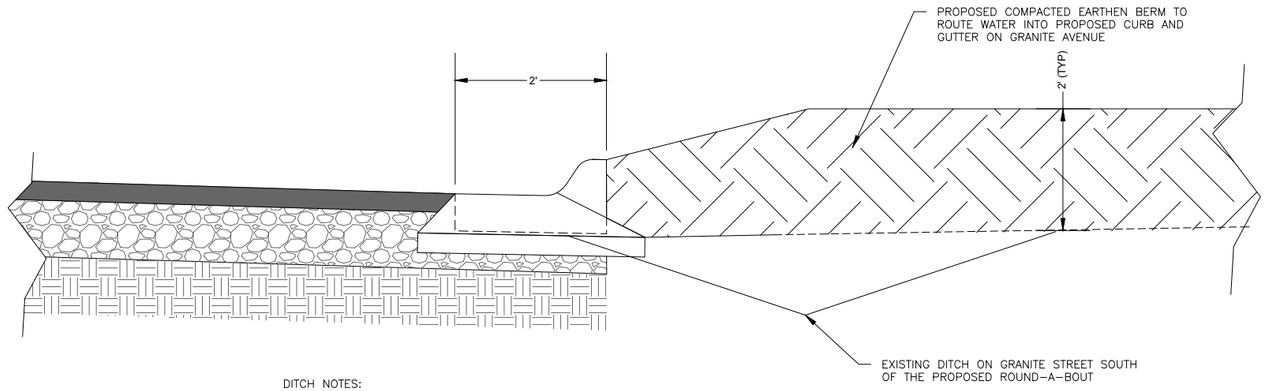

DITCH NOTES:
1. EXISTING DITCH TO BE FILLED IN WITH BERM TO ROUTE WATER ONTO GRANITE AVENUE CURB AND GUTTER ON BOTH EAST AND WEST SIDES OF GRANITE AVENUE.
2. TAPER BERM UPHILL OF OUTLET POINT TO GRANITE AVENUE. THE OUTLET IS TO BE THE LOWEST POINT ON THE PROPOSED BERM TO ENSURE PROPER STORMWATER CONVEYANCE.

1 GRANITE DITCH TO CURB TRANISTION SECTION VIEW

NOT TO SCALE

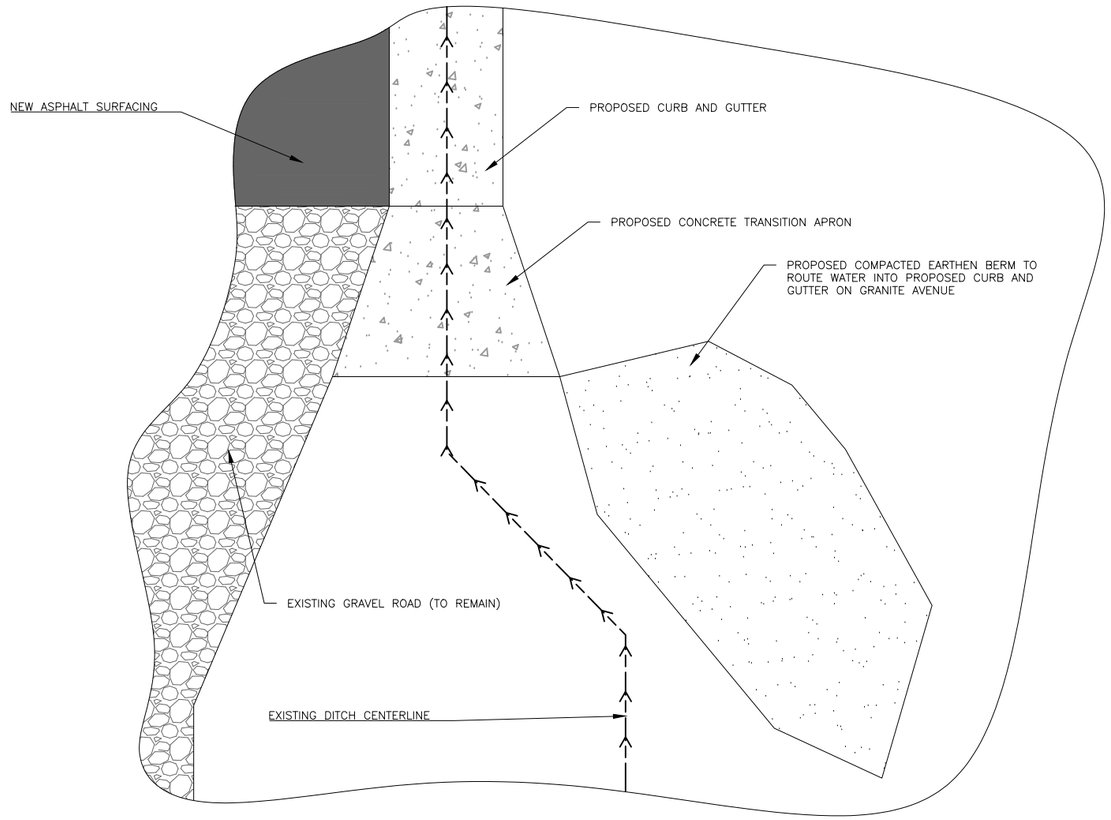

2 GRANITE DITCH TO CURB TRANISTION PLAN VIEW

NOT TO SCALE

FOR REVIEW

NO.	REVISION DESCRIPTION	BY	DATE

PROJECT: 2023-07
DESIGNED: DDP
DRAWN: VG
CHECKED: DDP
APPROVED: STH
DATE: FEB. 2025

MONTANA
DARYL DREW PEARSON
No. 62631ES
LICENSED PROFESSIONAL ENGINEER-LAND SURVEYOR

WWC ENGINEERING
1275 MAPLE STREET, SUITE F
HELENA, MT 59601
(406) 443-3962

SUSSEX DEVELOPMENT, INC.
WEST SIDE WOODS SUBDIVISION PHASE 1 & 2 OFFSITE ROAD IMPROVEMTNTS
DETAILS - 2

SHEET NO.
22
OF 26

K:\Helena\ECO DEVELOPMENT LLC\2022292 West Side Subdivision 2nd Submittal\05CAD\Sheets\Phase 1\22292-DETL-CURB.dwg

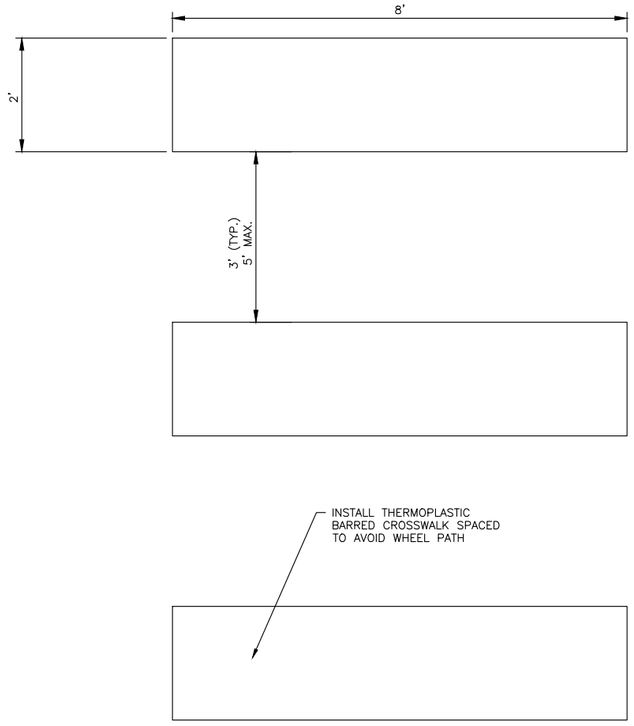

TYPICAL CROSSWALK DETAIL

NOT TO SCALE

NOTES:
1. CROSSWALK BARS TO BE SPACED TO AVOID WHEEL PATH.
2. CONTRACTOR TO COORDINATE WITH THE CITY TRANSPORTATION ENGINEER PRIOR TO INSTALLATION OF CROSSWALK BARS.

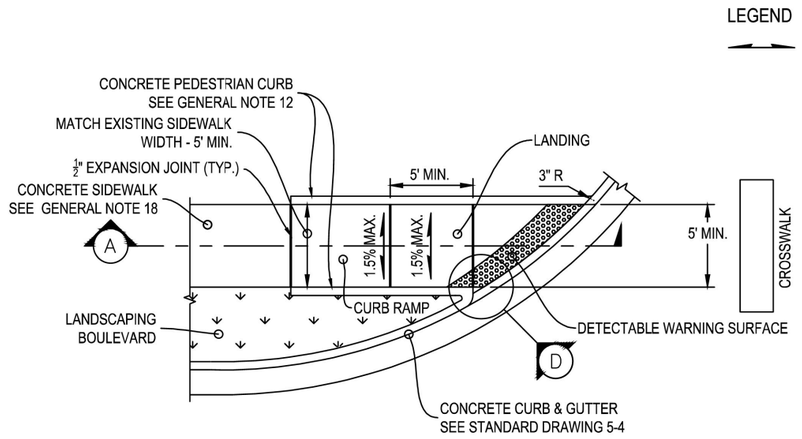

PLAN VIEW
TYPE SINGLE DIRECTION A

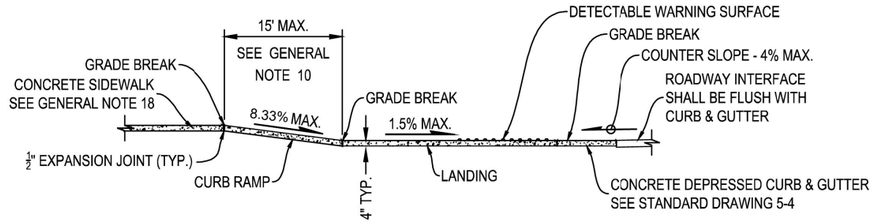

SECTION A

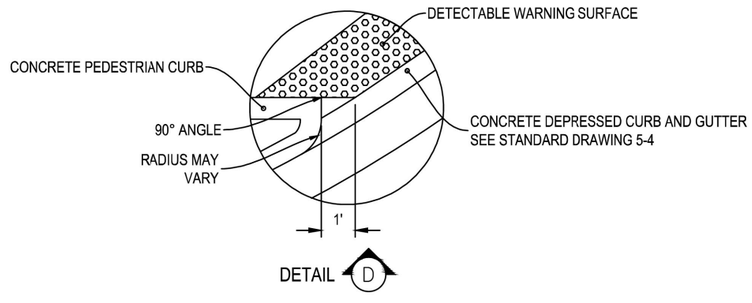

DETAIL D

FOR REVIEW

NO.	REVISION DESCRIPTION	BY	DATE

PROJECT: 2023-07
DESIGNED: DDP
DRAWN: VG
CHECKED: DDP
APPROVED: STH
DATE: FEB. 2025

MONTANA
DARYL
DREW
PEARSON
No. 62631ES
LICENSED
PROFESSIONAL
ENGINEER - LAND SURVEYOR

WWC ENGINEERING
1275 MAPLE STREET, SUITE F
HELENA, MT 59601
(406) 443-3962

SUSSEX DEVELOPMENT, INC.
WEST SIDE WOODS SUBDIVISION PHASE 1 & 2 OFFSITE ROAD IMPROVEMTNTS

DETAILS - 3

SHEET NO.
23
OF 26

K:\Helena\ECO DEVELOPMENT LLC\2022292 West Side Subdivision 2nd Submittal\05CAD\Sheets\Phase 1\22292-DETL-CURB.dwg

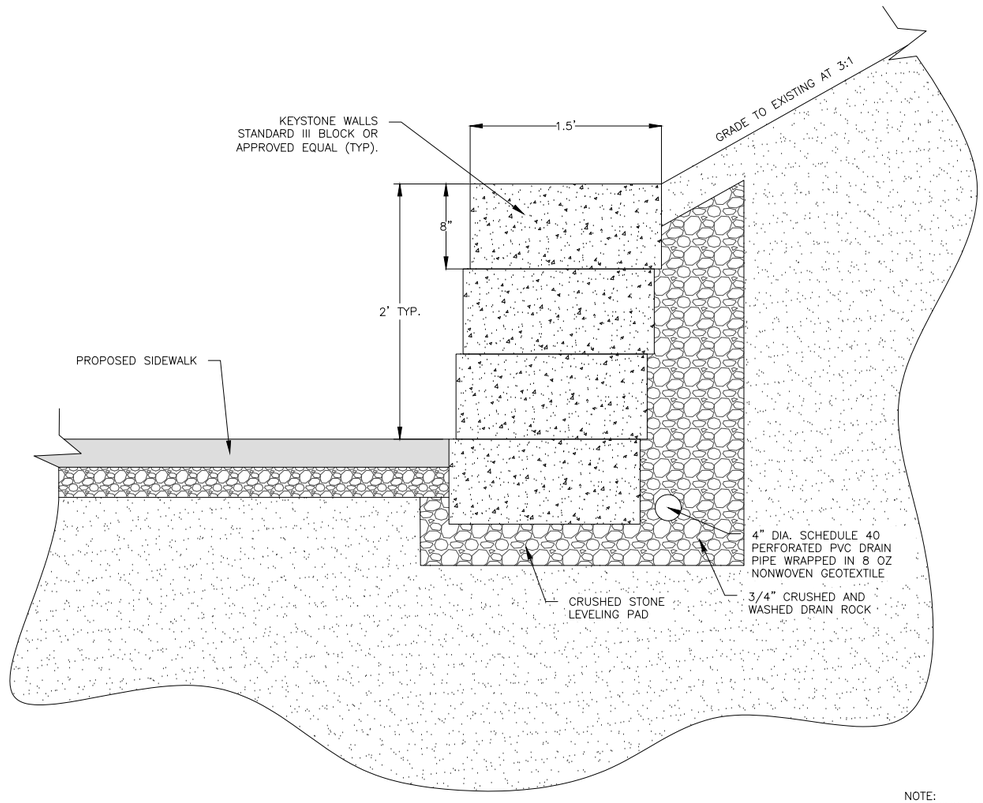

1 **RETAINING WALL IN CUT DETAIL**
NOT TO SCALE

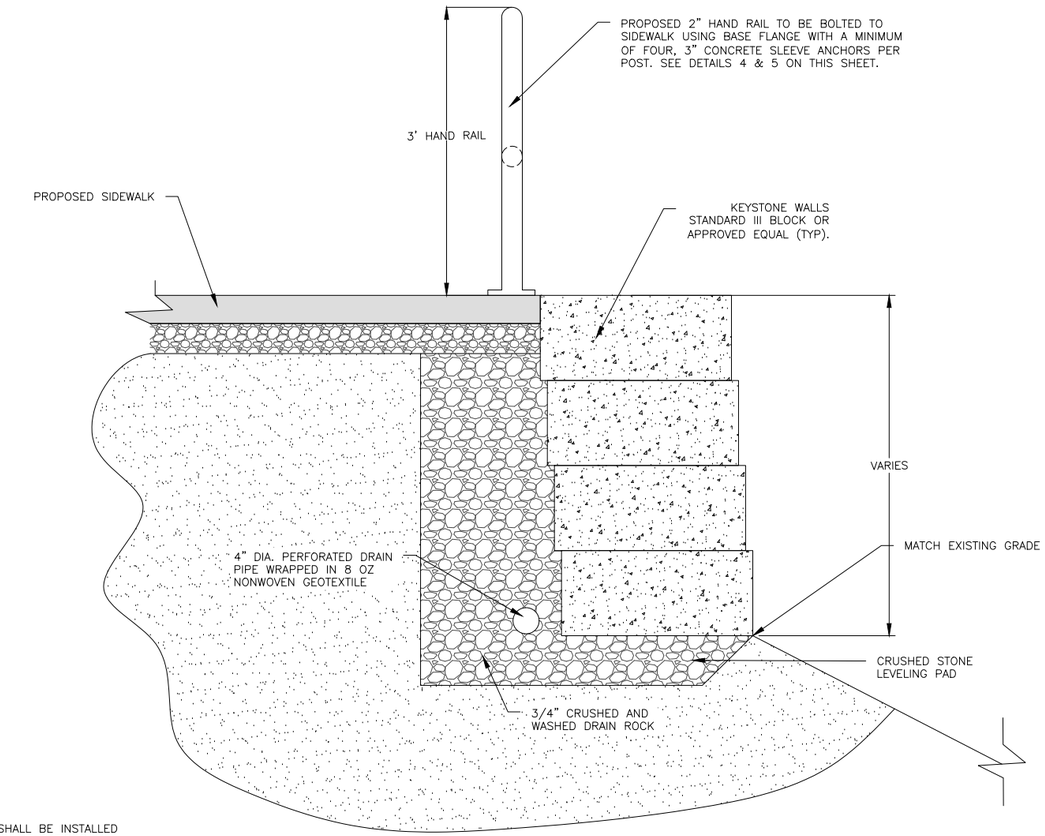

NOTE:
RETAINING WALL BLOCKS SHALL BE INSTALLED
PER MANUFACTURERS RECOMMENDATIONS.

2 **RETAINING WALL IN FILL DETAIL**
NOT TO SCALE

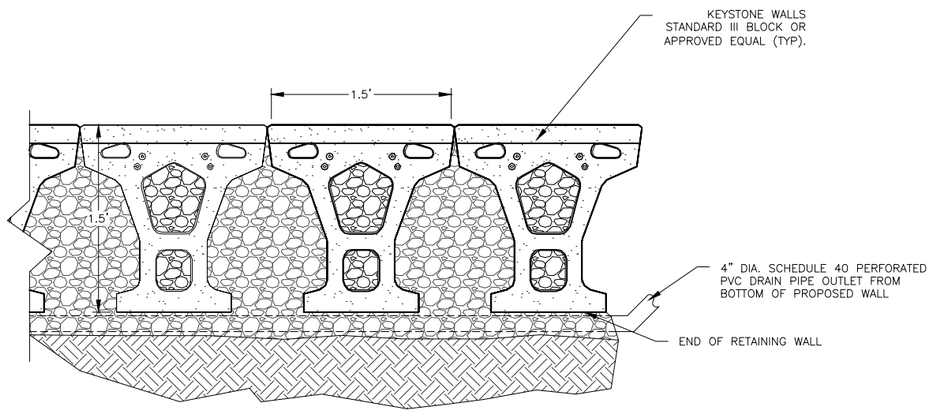

3 **DRAIN PIPE PLAN VIEW**
NOT TO SCALE

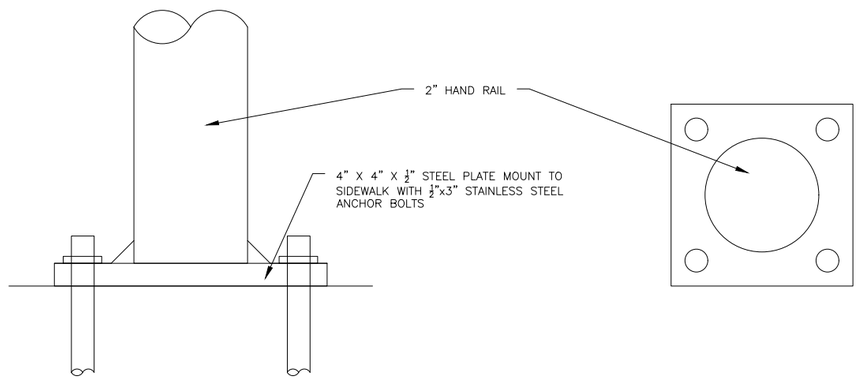

4 **BASE BLATE PROFILE DETAIL**
NOT TO SCALE

5 **BASE BLATE PLAN DETAIL**
NOT TO SCALE

FOR REVIEW

NO.	REVISION DESCRIPTION	BY	DATE

PROJECT: 2023-07
DESIGNED: DDP
DRAWN: VG
CHECKED: DDP
APPROVED: STH
DATE: FEB. 2025

MONTANA
DARYL
DREW
PEARSON
No. 62631ES
LICENSED PROFESSIONAL ENGINEER-LAND SURVEYOR

WWC ENGINEERING
1275 MAPLE STREET, SUITE F
HELENA, MT 59601
(406) 443-3962

SUSSEX DEVELOPMENT, INC.
WEST SIDE WOODS SUBDIVISION PHASE 1 & 2 OFFSITE ROAD IMPROVEMTNTS
RETAINING WALL DETAILS

SHEET NO.
24
OF 26

K:\Helena\ECO DEVELOPMENT LLC\2022292 West Side Subdivision 2nd Submittal\05CAD\Sheets\Phase 1\22292-DETL-CURB.dwg

1/54 SIGN PLACEMENT DETAILS

NOT TO SCALE

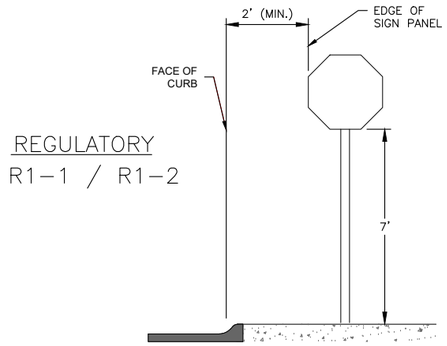

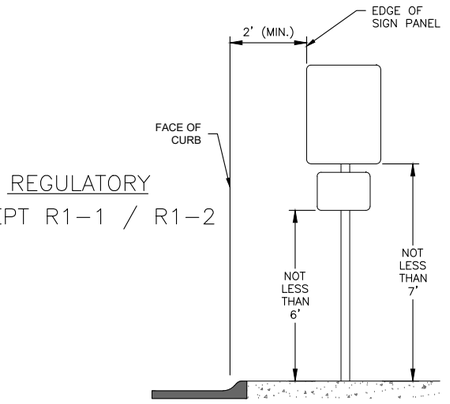

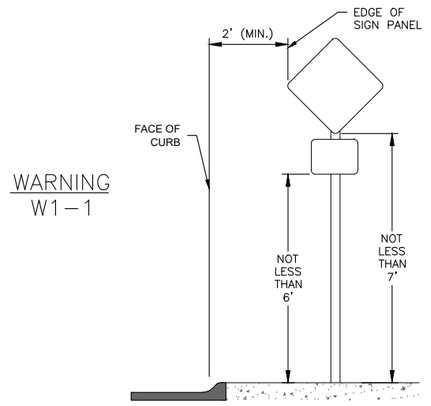

2/54 TYPICAL STEEL POST MOUNTING DETAIL

NOT TO SCALE

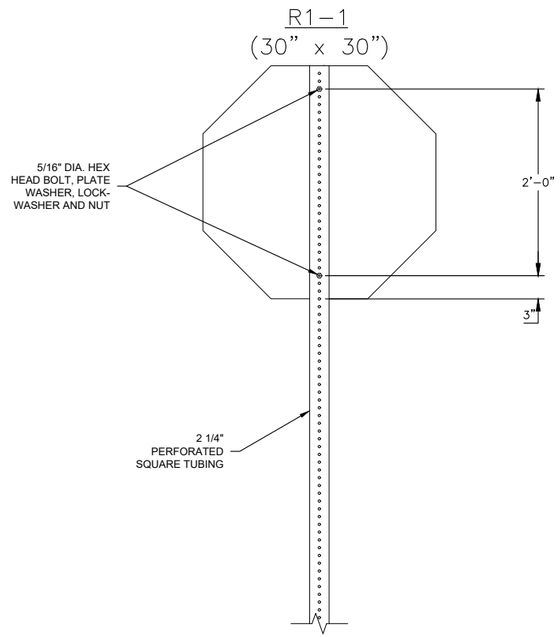

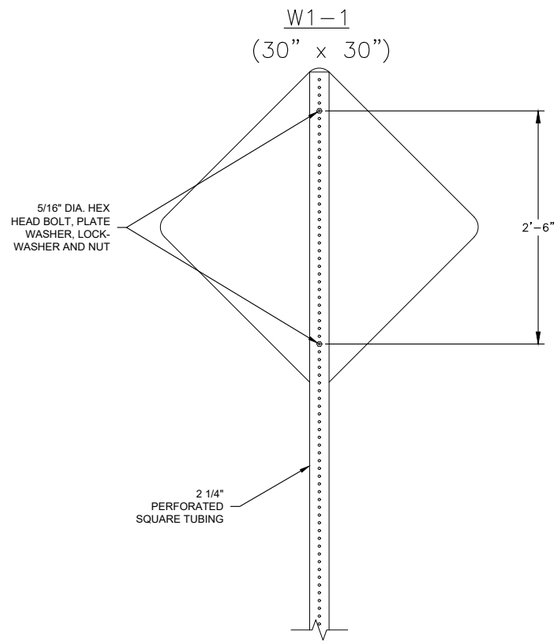

3/54 STREET NAME SIGN INSTALLATION

NOT TO SCALE

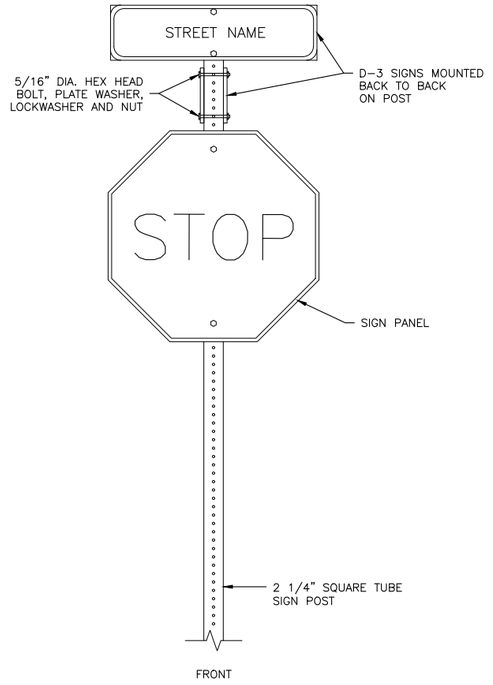

FRONT

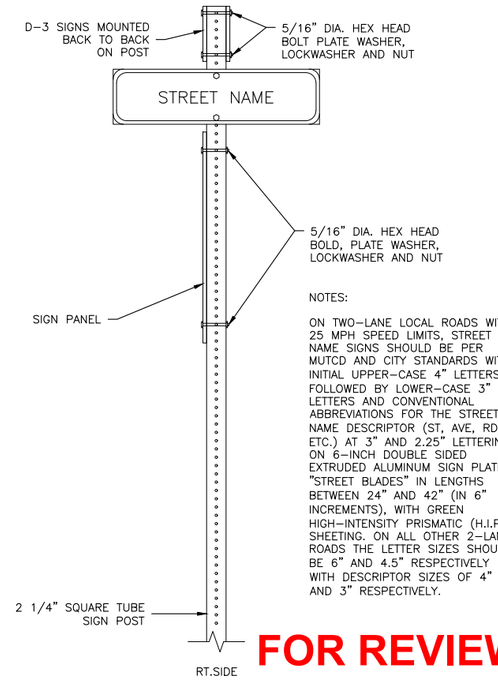

NOTES:

ON TWO-LANE LOCAL ROADS WITH 25 MPH SPEED LIMITS, STREET NAME SIGNS SHOULD BE PER MUTCD AND CITY STANDARDS WITH INITIAL UPPER-CASE 4" LETTERS FOLLOWED BY LOWER-CASE 3" LETTERS AND CONVENTIONAL ABBREVIATIONS FOR THE STREET NAME DESCRIPTOR (ST, AVE, RD, ETC.) AT 3" AND 2.25" LETTERING ON 6-INCH DOUBLE SIDED EXTRUDED ALUMINUM SIGN PLATES "STREET BLADES" IN LENGTHS BETWEEN 24" AND 42" (IN 6" INCREMENTS), WITH GREEN HIGH-INTENSITY PRISMATIC (H.I.P.) SHEETING. ON ALL OTHER 2-LANE ROADS THE LETTER SIZES SHOULD BE 6" AND 4.5" RESPECTIVELY WITH DESCRIPTOR SIZES OF 4" AND 3" RESPECTIVELY.

RT.SIDE

FOR REVIEW

NO.	REVISION DESCRIPTION	BY	DATE

PROJECT: 2023-07
DESIGNED: BJD
DRAWN: BJD
CHECKED: DDP
APPROVED: STH
DATE: FEB. 2025

MONTANA
DARYL DREW PEARSON
No. 62631ES
LICENSED PROFESSIONAL ENGINEER-LAND SURVEYOR

WWC ENGINEERING
1275 MAPLE STREET, SUITE F
HELENA, MT 59601
(406) 443-3962

SUSSEX DEVELOPMENT, INC.
WEST SIDE WOODS SUBDIVISION PHASE 1 & 2 OFFSITE ROAD IMPROVEMTNTS

TRAFFIC CONTROL DETAIL - 1

SHEET NO.
25
OF 26

K:\Helena\ECO DEVELOPMENT LLC\2022292 West Side Subdivision 2nd Submittal\05CAD\Sheets\Phase 1\Roads\Off-site Roads\22292-DETL-SIGN.dwg

Xref ..\1815-WSWS-Eng Seal.dwg

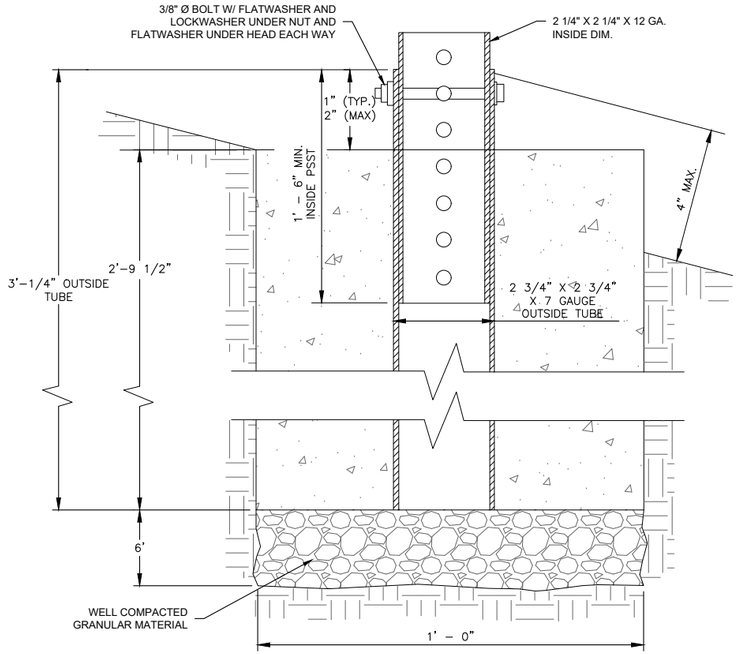

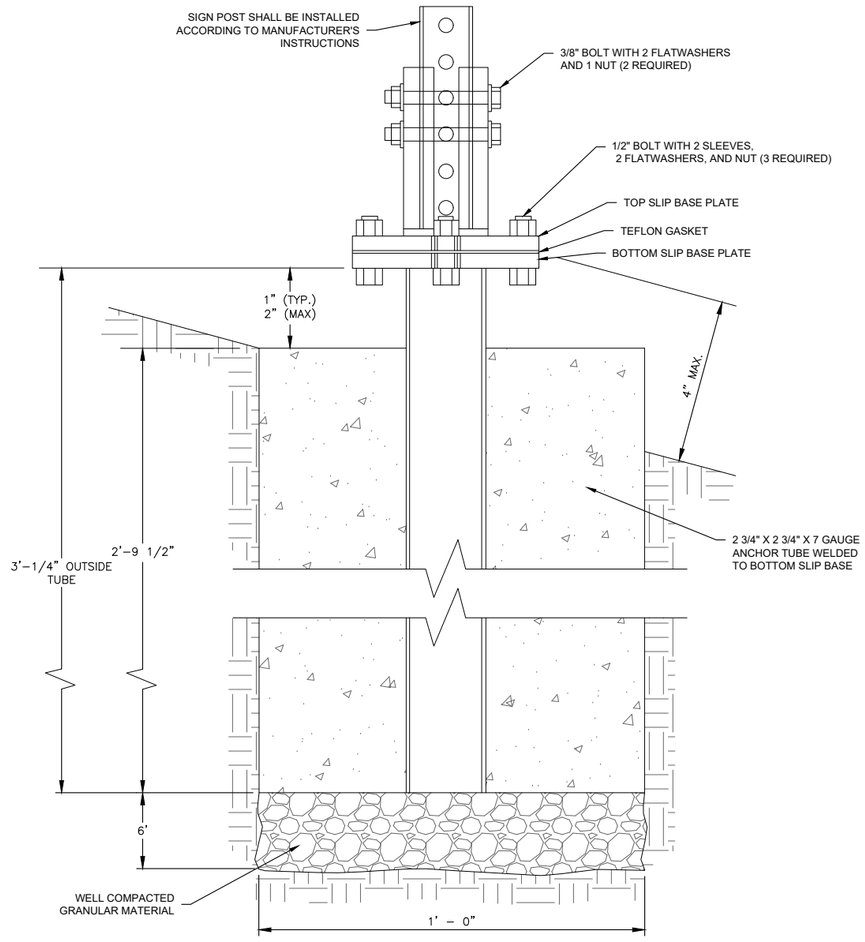

4/55 OPTION A 2 1/4" ANCHOR DETAIL

NOT TO SCALE

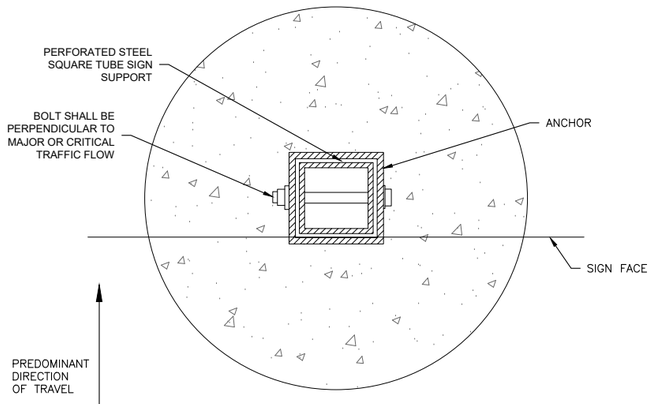

PLAN

NOT TO SCALE

5/55 OPTION B SLIP BASE ANCHOR DETAIL

NOT TO SCALE

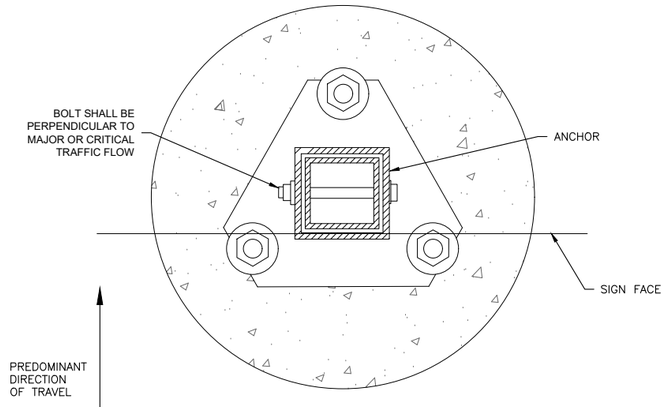

PLAN

NOT TO SCALE

FOR REVIEW

NO.	REVISION DESCRIPTION	BY	DATE

PROJECT: 2023-07
DESIGNED: BJD
DRAWN: BJD
CHECKED: DDP
APPROVED: STH
DATE: FEB. 2025

MONTANA
DARYL DREW PEARSON
No. 62631ES
LICENSED PROFESSIONAL ENGINEER - LAND SURVEYOR

WWC ENGINEERING
1275 MAPLE STREET, SUITE F
HELENA, MT 59601
(406) 443-3962

SUSSEX DEVELOPMENT, INC.
WEST SIDE WOODS SUBDIVISION PHASE 1 & 2 OFFSITE ROAD IMPROVEMTNTS

TRAFFIC CONTROL DETAIL - 2

SHEET NO.
26
OF 26

K:\Helena\ECO DEVELOPMENT LLC\2022292 West Side Subdivision 2nd Submittal\05CAD\Sheets\Phase 1\Roads\Off-site Roads\22292-DETL-SIGN.dwg