HELENA MONTANA

QUEEN CITY OF THE ROCKIES

Helena Water Facilities Plan

CHAPTER 7 – DISTRIBUTION SYSTEM ANALYSIS

Prepared by:

Craig Habben, P.E.

Tina Whitfield, P.E.

Reviewed by:

Gary Fuller, P.E.

Table of Contents

Introduction 7-1
Distribution System Model 7-1
Existing Pressure Zones 7-1
Future Pressure Zones and Demands 7-4
Fire Flow Requirements 7-6
Storage Analysis 7-6
Storage Assumptions and Rules 7-8
Supplying Hale Zone 7-12
Pumping Analysis 7-16
Existing Pump Stations 7-16
Future Pump Stations 7-18
Valley Zone Analysis 7-18
Fire Flow Analysis 7-19
Existing System Fire Flow Evaluation 7-21
2025 Fire Flow Analysis 7-25
System Improvements from Fire Flow Capacity Analysis 7-25
Distribution System Piping 7-30
Improvements to Existing System 7-30
Future Extensions 7-31
Rehabilitation and Replace Projects 7-34
Recommendations 7-34
Reversing Plant Roles 7-36
Distribution Analysis 7-49

Table of Figures

Figure 7-1 Existing Pressure Zone Map 7-2
Figure 7-2 Distribution System Schematic 7-3
Figure 7-3 Future Pressure Zone Map 7-5
Figure 7-4 Winne, Reeder's Village and Forrest Estates Storage Options 7-13
Figure 7-5 Malben-Woolston and Valley Zone Storage Options 7-14
Figure 7-6 Hale Zone Supply Options 7-15
Figure 7-7 Pumping Analysis Options 7-20

Figure 7-8 Existing Fire Flow Availability 7-22
Figure 7-9 2024 Fire Flow Deficiencies Based on Land Use 7-23
Figure 7-10 2025 Fire Flow Analysis Deficiencies 7-24
Figure 7-11 Fire Flow Related Improvements 7-28
Figure 7-12 Existing System Improvements 7-32
Figure 7-13 Future Valley Zone Piping Schematic 7-33
Figure 7-14 Distribution Improvements Summary 7-37

Table of Tables

Table 7-1 Peak Day Demands by Pressure Zone 7-4
Table 7-2 Fire Flow Requirements by Zone 7-6
Table 7-3 Existing Storage Volumes by Reservoir and Zone 7-7
Table 7-4 Current Storage Requirements 7-7
Table 7-5 2025 Storage Requirements 7-8
Table 7-6 Current Storage Analysis Summary 7-9
Table 7-7 2025 Storage Analysis Summary 7-9
Table 7-8 Existing Design Capacities of Distribution Pumping Stations 7-16
Table 7-9 Fire Flow Criteria Based on Land Use Type 7-19
Table 7-10 Percent Deficient Nodes According to Fire Flow Requirement 7-21
Table 7-11 Summary of Recommended Improvements 7-27
Table 7-12 Prioritized Recommended Projects 7-34

Table of Appendices

Appendix 7-A Water Distribution System Hydraulic Model 7-38

Introduction

This chapter expands on the existing description of the distribution system from Chapter 3, details the steps required to analyze the system and describes improvements and expansion of the distribution system for the future. In general, the steps include: developing a hydraulic model, determining demands by pressure zone, analyzing system storage by pressure zone, analyzing pump station capacity, and evaluating the ability of the distribution system to meet fire flow demands. This chapter also looks at future transmission to areas of growth.

Distribution System Model

The 1999 City of Helena Water System Plan included the development of a hydraulic model using CyberNet™ (a.k.a., WaterCAD™) software by Haestad Methods, Inc. This model included a total pipe length of greater than 520,000 feet (98.5 miles).

The City of Helena /Lewis & Clark County (City-County) Geographic Information System (GIS) staff has been maintaining an inventory of water distribution system assets in an electronic geodatabase. The City-County GIS water system geodatabase contains a waterline length total of greater than 1,008,000 feet (192 miles). The current water system inventory in GIS is more detailed than the inventory used for the previous modeling effort. Therefore, in lieu of simply updating the previous model with the missing pipes, an entirely new model in the City-County GIS framework was constructed. A complete description of the model construction process is included in Appendix 7-A.

Existing Pressure Zones

As mentioned in Chapter 3, the City of Helena distribution system is divided into seven pressure zones. In order of highest hydraulic grade line (HGL) elevation to lowest, the zones are:

- Upper Hale
- Winne
- Hale
- Forrest Estates
- Reeder's Village
- Upper Malben-Woolston
- Lower Malben-Woolston

The Hale and Upper Hale Zones can only be supplied by the Orofino and Eureka wells in the current system.

The location of these pressure zones are shown in Figure 7-1. A schematic of the distribution system is shown in Figure 7-2, which includes relative elevations of the system components.

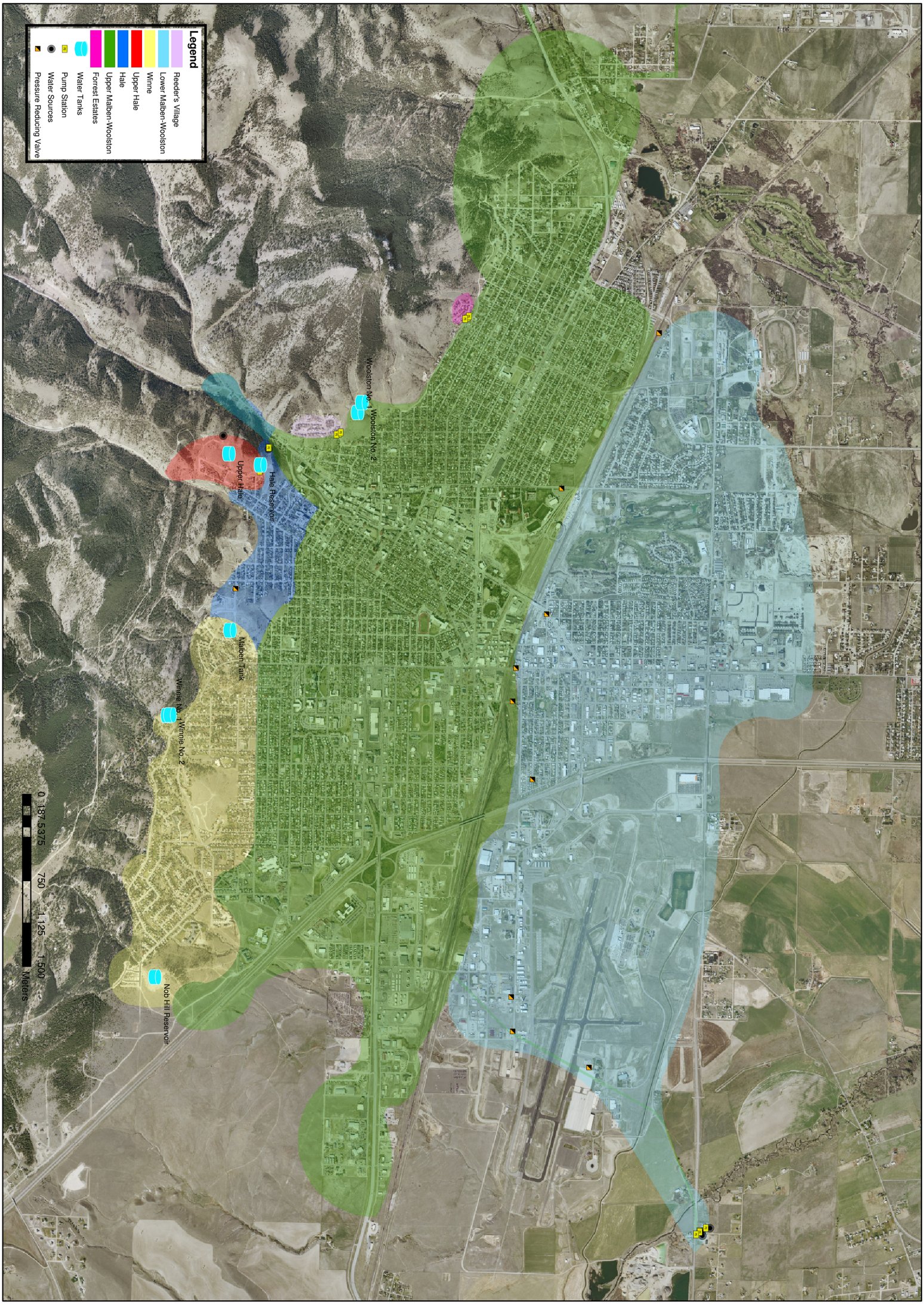

Figure 7-1
Existing Pressure Zones

City of Helena
Water Facilities Plan

HELENA MONTANA
QUEEN CITY OF THE ROCKIES
ONE COMPANY | Many Solutions HDR

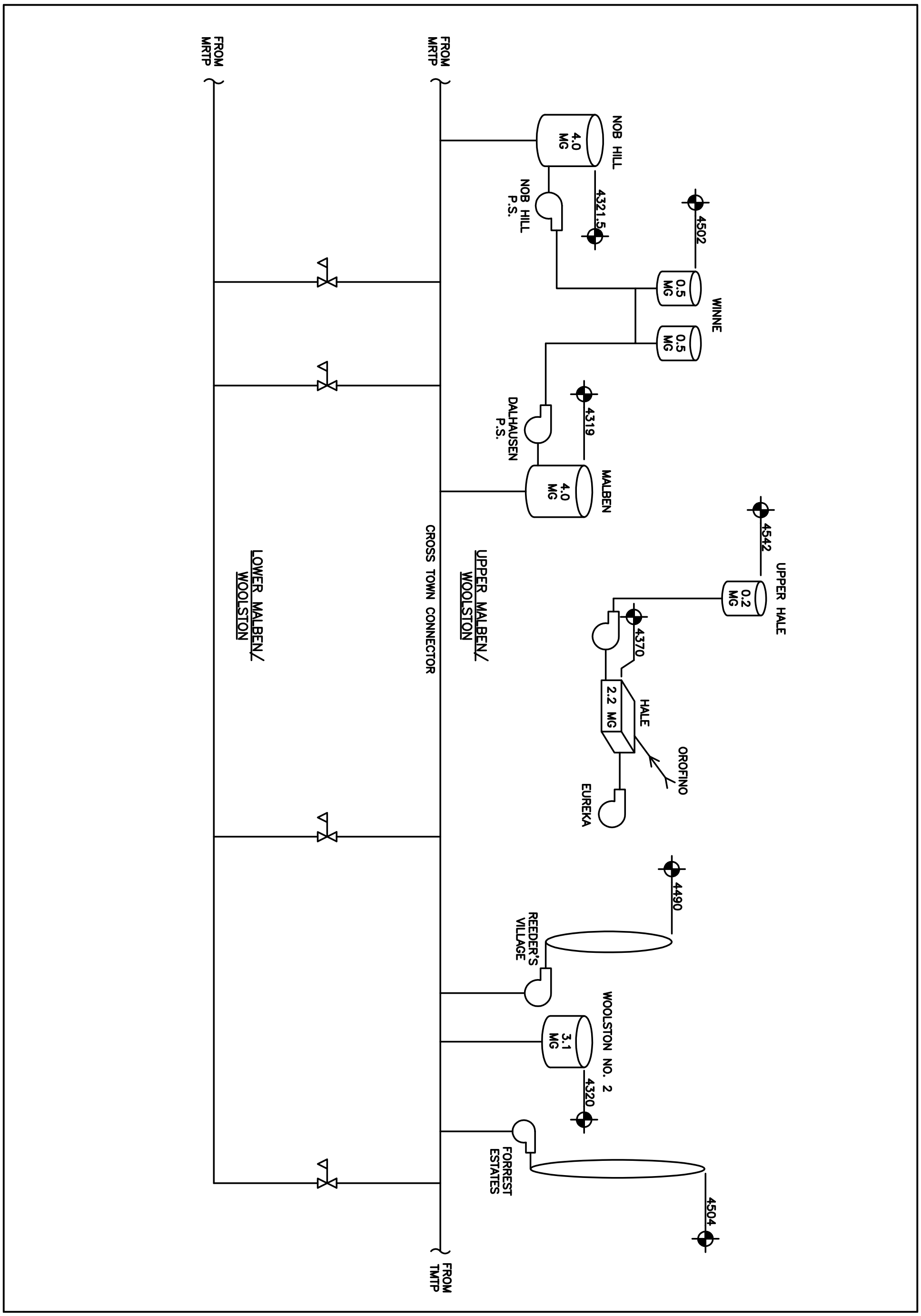

Figure 7–2
Water Distribution System
Schematic

City of Helena
Water Facilities Plan

HELENA MONTANA
QUEEN CITY OF THE ROCKIES

ONE COMPANY | Many Solutions HDR

The Ten Mile Treatment Plant (TTP) feeds into the Upper Malben-Woolston Zone with the primary supply being a 20 and 24-inch diameter pipeline, called the Cross-Town Connector, which runs east-west across the south end of the service area. The Missouri River Treatment Plant (MRTP), when used, normally feeds into the Upper Malben-Woolston Zone but has limited capability for feeding into the Lower Malben-Woolston Zone. From the Upper Malben-Woolston Zone, water is pumped up to the Winne Zone from the Dalhausen and Nob Hill Pump Stations. Pump stations also serve closed loop (no storage) systems for Reeder's Village and Forrest Estates. The Lower Malben-Woolston Zone is normally fed from the Upper Malben-Woolston Zone via pressure reducing valves. The Hale Zone and Upper Hale Zone are only fed by the Orofino and Eureka sources and are thus separated from the rest of the system.

Future Pressure Zones and Demands

In Chapter 5, the existing (2004) and future (2025) peak day demands were established at 12.8 and 20.9 MGD, respectively. In order to analyze the distribution system, the demands were divided to each pressure zone. The transportation analysis zones (TAZ) from the Greater Helena Area Transportation 2004 Update were used to determine population distribution to each pressure zone. Then the percent population was applied to the overall peak day demand to get the peak day demand in each zone. These demands are summarized in Table 7-1 for 2004 and 2025 conditions.

Table 7-1 Peak Day Demands by Pressure Zone

Pressure Zone	Current Peak Day Demand (MGD)	2025 Peak Day Demand (MGD)
Upper Hale	0.12	0.13
Winne	1.39	1.49
Hale	0.42	0.44
Forrest Estates	0.03	0.04
Reeder's Village	0.02	0.02
Upper Malben-Woolston	8.13	11.44
Lower Malben-Woolston	2.69	4.51
Valley	0.00	2.79
Total	**12.8**	**20.9**

A new pressure zone - the Valley Zone - is included in this table. The Valley Zone serves lower elevations than the Lower Malben-Woolston Zone and roughly extends north from the Helena Valley Irrigation Canal nearly to the limits of the study area. The Lower Malben-Woolston Zone encompasses the Valley Zone on the west and the north. The Valley Zone and the future limits of the other pressure zones are shown in Figure 7-3.

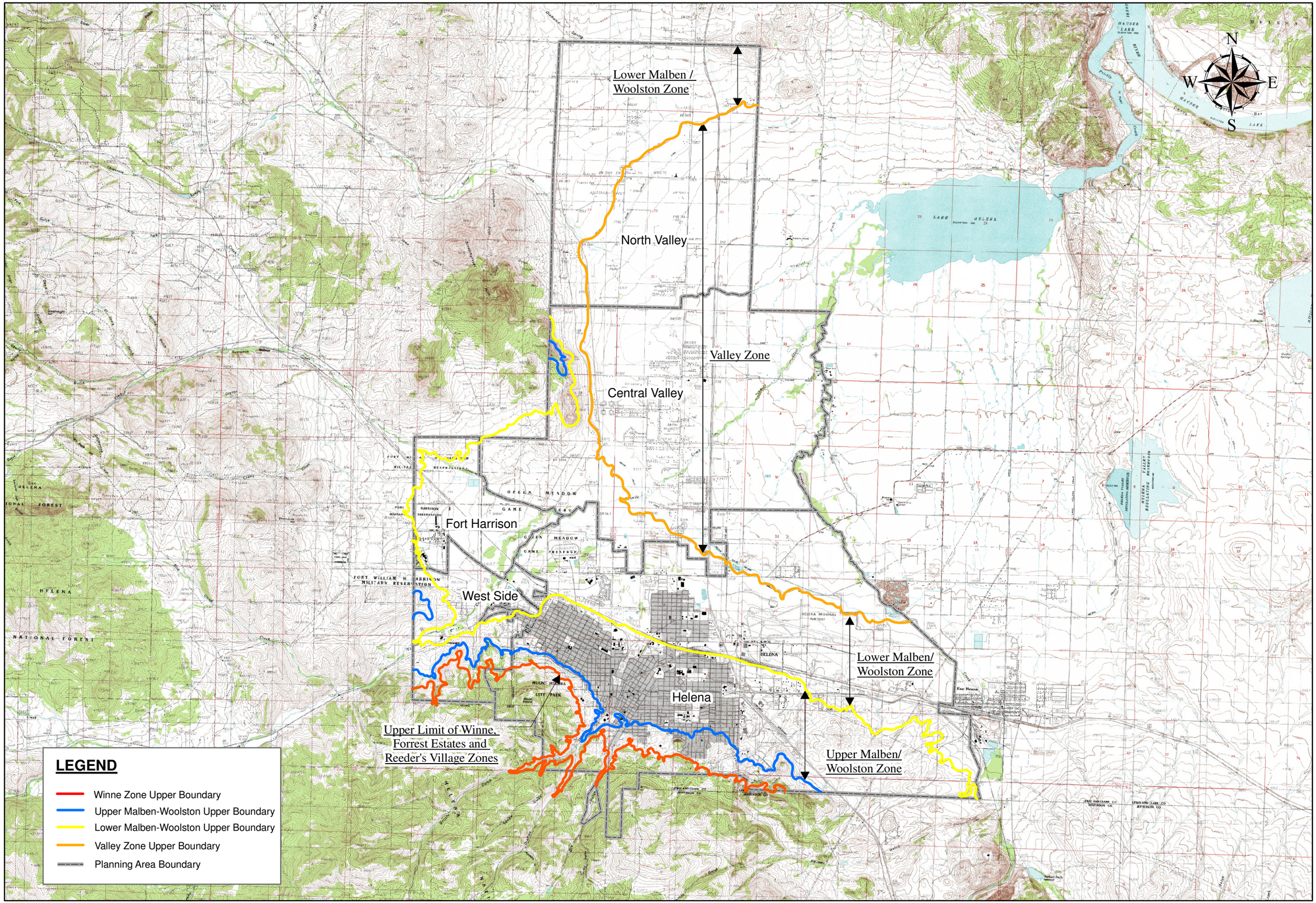

HELENA MONTANA
QUEEN CITY OF THE ROCKIES
ONE COMPANY | Many Solutions HDR

City of Helena
Water Facilities Plan

Figure 7-3
Future Pressure Zones

Fire Flow Requirements

The next component in evaluation of the distribution system is the determination of fire flow availability in each pressure zone. Fire flow requirements, from which availability is tested, are based on a flow rate of water over a certain duration of time, as set by the Uniform Fire Code and vary by the building type present. To determine the typical building types present in each pressure zone, the GIS zoning layer was overlaid on the pressure zone layer. Table 7-2 summarizes the fire flow rate and duration required for each pressure zone. More details on fire flow are included below in the fire flow analysis section.

Table 7-2 Fire Flow Requirements by Zone

Zone	Max Zone Fire Flow (gpm)	Duration (hours)	Land Uses
Forrest Estates	1,750	2	Large Residential (>3,600 sf)
Hale	1,750	2	Residential, Office
Lower Malben-Woolston	3,750	3	Residential, Business, Commercial/ Light Manufacturing, Industrial
Reeder's Village	1,750	2	Large Residential (>3,600 sf)
Upper Malben-Woolston	3,750	3	Residential, Business, Commercial/ Light Manufacturing, Industrial
Upper Hale	1,000	2	Residential (<=3,600 sf)
Winne	1,750	2	Residential, Office
Valley	1,750	2	Residential, Office, Commercial

Storage Analysis

Table 7-3 summarizes the total and effective storage volumes by reservoir and pressure zone. As discussed in Chapter 3, not all the existing distribution storage is available for use. To determine storage needs, a storage analysis was completed for each pressure zone. Storage requirements include provisions for a fire event, emergency storage, and equalizing storage. The equalizing storage portion is provided to allow the distribution system to meet diurnal demands. The amount of equalization storage required is based on a typical benchmark value of 15 percent of the peak day demand. Emergency storage is provided for water main breaks, water main repair, pump station maintenance and other expected or unexpected events that impact the system. Emergency storage is based on 50 percent of peak day demand. Fire demand storage is based on having the amount of water needed for a fire event available in storage. This amount is based on fire flow demand and the duration guidelines specific to the land use.

The Winne Zone, Reeder's Village, and Forrest Estates have inadequate storage both currently and in 2025.

Based on the fire demands, the equalizing storage and the emergency storage requirements, a total storage need for each zone under current and 2025 conditions was determined and summarized in Table 7-4 and Table 7-5. The total demand for all seven zones is given, followed by the total without the Hale Zones (which are currently not connected to the rest of the system) and the total of the Upper Malben-Woolston Zone and the Lower Malben-Woolston Zone (the largest two zones in the existing system). These totals reflect worst

case fire flow storage conditions.

Table 7-3 Existing Storage Volumes by Reservoir and Zone

Zone	Reservoir	Total (MG)	Available (MG)	Zone Totals (MG)
Upper Hale	Upper Hale	0.20	0.20	0.20
Winne	Winne No. 1	0.50	0.50	1.00
	Winne No. 2	0.50	0.50	
Hale	Hale	2.20	2.20	2.20
Forrest Estates	Forrest Estates	0.00	0.00	0.00
Reeder's Village	Reeder's Village	0.00	0.00	0.00
Upper Malben-Woolston	TTP Clearwell	3.92	2.84	9.54
	Woolston No. 1	3.00	0.00	
	Woolston No. 2	3.10	0.00	
	Malben	4.00	2.70	
	Nob Hill	4.00	4.00	

Table 7-4 Current Storage Requirements

Zone	Equalizing Storage (MG)	Fire Flow Storage (MG)	Emergency Storage (MG)	Total Required (MG)	Available (MG)
Upper Hale	0.02	0.12	0.06	0.20	0.20
Winne	0.21	0.21	0.70	1.12	1.00
Hale	0.06	0.21	0.21	0.48	2.20
Forrest Estates	0.01	0.21	0.02	0.23	9.54
Reeder's Village	0.00	0.21	0.01	0.22	
Upper Malben-Woolston	1.22	0.68	4.06	5.96	
Lower Malben-Woolston	0.40	0.68	1.34	2.42	
Valley [a]	--	--	--	--	
Total	**1.92**	**0.68**	**6.40**	**9.00**	**12.94**
Total w/o Hale Zones	**1.84**	**0.68** [b]	**6.13**	**8.65**	**10.54**
Total Malben-Woolston	**1.62**	**0.68**	**5.40**	**7.70**	**9.54**

[a] The Valley Zone is not in the current system.
[b] Totals assume a worst case scenario for fire.

Table 7-5 2025 Storage Requirements

Zone	Equalizing Storage (MG)	Fire Flow (MG)	Emergency (MG)	Total Required (MG)	Existing Available (MG)
Upper Hale	0.02	0.12	0.06	0.20	0.20
Winne	0.22	0.21	0.74	1.18	1.00
Hale	0.07	0.21	0.22	0.50	2.20
Forrest Estates	0.01	0.21	0.02	0.23	9.54
Reeder's Village	0.00	0.21	0.01	0.22	
Upper Malben-Woolston	1.72	0.68	5.72	8.11	
Lower Malben-Woolston	0.80	0.68	2.68	4.16	
Valley	0.57	0.68	1.91	3.16	
Total	**3.41**	**0.68**	**11.36**	**15.45**	**12.94**
Total w/o Hale	**3.34**	**0.68**	**11.14**	**14.75**	**10.54**
Total Malben-Woolston	**3.10**	**0.68**	**10.34**	**14.08**	**9.54**

Storage Assumptions and Rules

The following assumptions and rules were used in analyzing the system storage and identification of storage improvements:

- Evaluate storage based on an individual pressure zone.
- Use of storage in a zone of lower hydraulic grade for a higher zone requires the following:
    - If inadequate storage for fire, a properly rated and tested fire pump is required.
    - Firm pump capacity is supplied to meet peak hour demands.
    - Backup power is required for fire pump and peak hour demand pump.
- A single fire event at any given location at a time.

Based on these assumptions and rules, results at current storage conditions are summarized in Table 7-6.

Table 7-6 Current Storage Analysis Summary

Zone	Analysis
Upper Hale	Adequate.
Winne	Requires additional 0.12 MG.
Hale	Adequate.
Forrest Estates	Need 0.03 MG from Upper Malben-Woolston assuming fire is in Upper Malben-Woolston. Need fire pump and backup power to meet storage requirement
Reeder's Village	Need 0.01 MG from Upper Malben-Woolston assuming fire is in Upper Malben-Woolston. No modifications needed as pump station has fire pump, redundant peak hour pumps and backup power.
Upper Malben-Woolston	Adjusted storage demand based on requirements of Forrest Estates, Reeder's Village and Winne Zones is 7.86 MG. With 9.54 MG available, storage is adequate.
Lower Malben-Woolston	Adequate based on storage in Upper Malben-Woolston.

Table 7-7 summarizes the 2025 Storage Analysis.

Table 7-7 2025 Storage Analysis Summary

Zone	Analysis
Upper Hale	Adequate.
Winne	Requires additional 0.18 MG.
Hale	Adequate.
Forrest Estates	Need 0.03 MG from Upper Malben-Woolston assuming fire is in Upper Malben-Woolston. Need fire pump and backup power to meet storage requirements
Reeder's Village	Need 0.01 MG from Upper Malben-Woolston assuming fire is in Upper Malben-Woolston. Pump station has fire pump, redundant peak hour pumpage and backup power.
Upper Malben-Woolston	Adjusted storage demand based on requirements of Forrest Estates, Reeder's Village and Winne Zones is 14.3 MG. With 9.54 MG available, 4.8 MG of additional storage is needed.
Lower Malben-Woolston	Inadequate based on Upper Malben-Woolston Analysis.
Valley	Inadequate based on Upper Malben-Woolston Analysis.

The Winne, Reeder's Village, and Forrest Estates Zones have inadequate storage both currently and in 2025. The Malben-Woolston Zones currently have adequate storage but

available storage will be exceeded in 2025. An alternative to storage is having pumps on backup power that can meet fire demands and peak hour demands. If a single pump is to meet the fire demand it must be tested on an annual basis at a minimum.

A West Side Reservoir would improve operations for Reeder's Village and Forrest Estates.

Reeder's Village has a 1,750 gpm fire pump and generator to meet fire demands. Peak hour demand for Reeder's Village Zone is estimated to be about 21 gpm. Reeder's Village Zone has 75 and 150 gpm pumps that can meet this peak hour demand and can also be operated by the generator simultaneously with the fire pump. Based on this pumping and backup power arrangement, Reeder's Village does not need storage. However, storage would improve operations over pumping into a closed loop and would be less routine maintenance.

Forrest Estates' largest pump is 500 gpm and does not have backup power. The peak hour demand for the Forrest Estates service area is estimated to be 41 gpm. Based on the criteria of this plan, 0.46 MG of reservoir storage would be needed to be meet 2025 demands for Forrest Estates, Reber #2 and Highland Park. If Reeder's Village were added, 0.47 MG of storage (West Side Reservoir) would be needed. Reeder's Village could be added by running a new pipe between Reeder's Village and Forrest Estates. This pipe could also serve areas along Le Grande Cannon Boulevard that have low pressure conditions. To best fit in the distribution system, the West Side Reservoir should have an overflow elevation of 4,502 feet.

In lieu of storage above Forrest Estates, two options were evaluated. One is to upgrade or replace Forrest Estates Pump Station to include a 1,750 gpm fire pump and redundant pumps with a capacity of at least 41 gpm. Also, backup power would be needed, sufficient to run one fire pump and one pump of at least 41 gpm. The second option is to provide a waterline between Reeder's Village and Forrest Estates and use the Reeder's Village Pump Station to serve both. Reeder's Pump Station currently has capacity to serve both. See Figure 7-4 for a schematic of these options.

The Winne Zone is 0.12 MG short of storage and the Nob Hill and Dalhausen Pump Stations are not on backup power. Alternatives to meet storage demands are to:

- Add additional storage at Winne;
- Add additional storage in Upper Hale and tie the two zones together; or
- Add backup power to one of the pump stations.

In 2025, the Malben-Woolston Zones and the Valley Zone need an additional 4.8 MG of storage.

Adding additional storage at Winne could be done by adding another 0.5 MG tank or replacing the existing tanks with one larger 1.5 MG tank. For the backup power option, there is adequate storage for fire demands, so backup power would only be needed for pumps to meet peak hour demands. Peak hour demands would be 1,510 gpm. Neither Nob Hill nor Dalhausen pump stations have a firm capacity of 1,510 gpm. Therefore one of the pump stations would need to be modified to have a minimum of 1,510 gpm of firm capacity and have backup power. Another option would be to have a fire pump at 1,750 gpm and then equalizing and emergency needs would come from the existing storage. See Figure 7-4 for a summary of the Winne, Reeder's Village, and Forrest Estate options.

The Lower Malben-Woolston Zone and the future Valley Zone do not currently have any storage. However, storage is available in the Upper Malben-Woolston Zone, since water can flow by gravity through PRVs to the lower zone. Therefore, these zones are analyzed in conjunction with the Upper Malben-Woolston Zone storage needs. For current conditions, the Malben-Woolston Zones have adequate storage, including demands from Forrest Estates, Winne, and Reeder's Village Zones.

To meet 2025 demands, the Malben-Woolston Zones and the Valley Zone need an additional 4.8 MG of storage. There are several options to increase the storage available to these zones:

1. Make use of existing storage that is not currently usable.

   A. TTP Clearwell – The backwash and surface wash pumps could be modified so that the active volume of the clearwell is increased. This would add 1.1 MG.

   B. MRTP Clearwell – The current clearwells at the MRTP would not provide significant additional storage. However, if a new 1.5 MG clearwell was built, the storage not required for contact time (CT) could be used, plus half of the existing clearwells could conservatively be kept active. In order to use this storage, backup power would need to be provided. This storage amount would be approximately 0.8 MG. Providing backup power on the Low Zone Pumps would be more cost effective, as the power requirement and thus the generator size would be smaller.

   C. Malben Reservoir – The Dalhausen pump station could be modified so that the entire volume of the reservoir would be active. This would add 1.3 MG.

   D. Woolston No. 2 – This reservoir has available storage in emergency situations when the hydraulic grade line would drop low enough. However, the hydraulic grade line does not drop low enough until a flow less than 2.5 MGD is coming from TTP. For this storage to be usable, provisions are needed to allow for flow movement in and out of the reservoir. Woolston No. 2 could add 3.1 MG of storage. Provisions for promoting inflow/outflow include:

      - Assure that the TTP operates at 2 MGD on a routine basis to allow Woolston No. 2 to fill and draw.

      - Pump out of Woolston No. 2 using Reeder's Village pump station. At average day 2025 demands, however, the turnover rate would be 120 days, which is too long to maintain good water quality.

      - Analyze the reservoir to see if the walls and roof could be raised above the HGL or the reservoirs at this site could be replaced with a taller reservoir. The overflow would need to be raised 10 feet to provide fill and draw under all conditions.

2. New storage.

   New storage in the Lower Malben-Woolston pressure zone would not only help meet storage needs, but as this zone and the Valley Zone have higher demands,

pumping from the MRTP will become more common and desirable. Having a reservoir would benefit operations because the pumps could operate on reservoir level instead of pumping into a closed system. A 3 to 4 MG reservoir would provide over half the 7.3 MG of storage required for the Lower Malben-Woolston and Valley Zones.

3. Maximize higher zone storage.

   Higher zone storage can be used to help meet requirements in the Lower Malben-Woolston and Valley pressures zones. The Hale Zone storage could be utilized and, if constructed with excess capacity, a West Side Reservoir could also be used. With both these improvements, PRVs would be required to permit flow to the lower zones.

   Figure 7-5 summarizes the Malben-Woolston and Valley Zone storage options for 2025.

Supplying Hale Zone

In lieu of continuing to supply the Hale Zones (Upper Hale and Hale) from Orofino and Eureka, the Hale Zones could be supplied from the Winne Zone, the Upper Malben-Woolston Zone or Reeder's Village. The following were evaluated and are shown in Figure 7-6.

Ultimately implementing all three options offers the most redundant system.

- ***Winne Zone Connection.*** Continue the existing 12-inch waterline from the Winne Zone (along the north side of Malben Reservoir) from Beattie and Rhode Island to Beattie and State Avenue. Connect the new 12-inch to the existing 10-inch at Beattie and State Avenue that leads back to the Hale Reservoir. A PRV should also be provided since Winne is a higher zone.

- ***Upper Malben-Woolston Connection***. Modify Dalhausen pump station to pump to the Hale Zone. The 12-inch waterline north of Malben would be extended to the existing 10-inch leading to the Hale Reservoir as described above.

- ***Reeder's Village Connection.*** Run an 8-inch line from the Reeder's Village pressure zone to the discharge side of Eureka pump station, which feeds the Hale Reservoir. A PRV is necessary at the connection point.

Ultimately, implementing all three options offers the most redundant system. Option 1 is the simplest option and phases well with Option 2. Option 2 improves the energy efficiency. Option 3 would improve redundancy if Eureka is taken out of service or if Reeder's Village is tied into West Main for fire flow reasons.

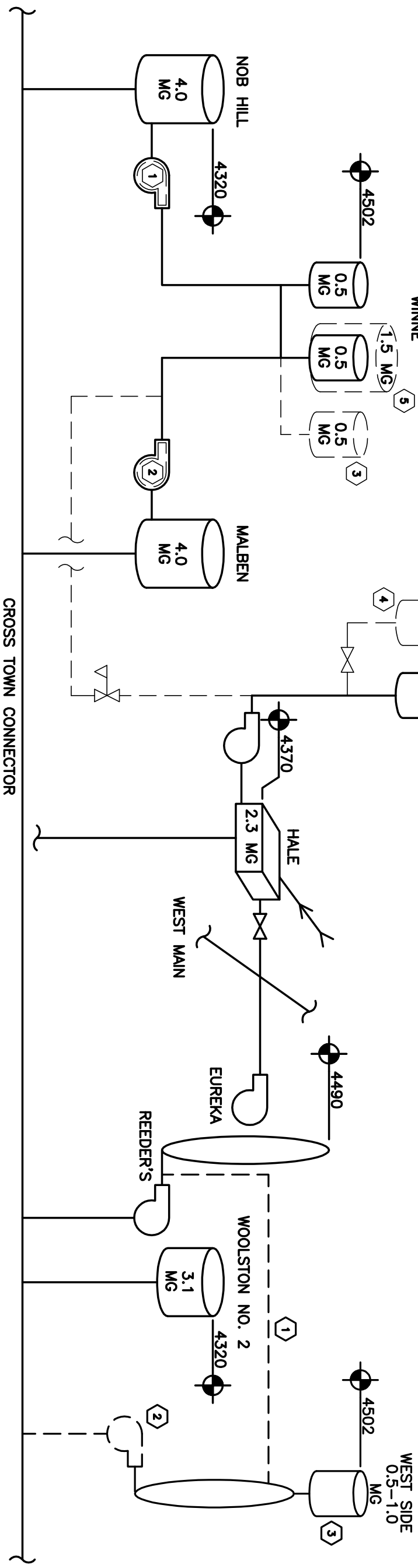

PURPLE – FORREST ESTATES, REEDER'S VILLAGE OPTIONS

1. RUN DISCHARGE OF REEDER'S TO FORREST ESTATES OR
2. UPGRADE FORREST ESTATES P.S. TO INCLUDE FIRE PUMP, PEAK HOUR PUMP AND BACKUP POWER OR
3. NEW RESERVOIR.

LT. BLUE – STORAGE OPTIONS FOR WINNE

1. PEAK HOUR PUMPS OR FIRE PUMP + GENERATOR @ KNOB HILL P.S. OR
2. PEAK HOUR PUMPS OR FIRE PUMP + GENERATOR @ DALHAUSEN P.S. OR
3. THIRD TANK @ WINNE SITE OR
4. SECOND TANK @ UPPER HALE OR
5. ONE LARGE TANK AT WINNE

Figure 7–4
Winne, Reeder's Village and Forrest Estates Storage Options

City of Helena
Water Facilities Plan

HELENA MONTANA
QUEEN CITY OF THE ROCKIES
ONE COMPANY | Many Solutions HDR

1. MODIFY BACKWASH AND SURFACE WATER PUMPING AT TWTP.
2. AVAILABLE STORAGE AT MRTP FROM NEW CLEARWELL BACKUP POWER.
3. MODIFY UPGRADE DALHAUSEN SO PUMPS CAN OPERATE AT A LOWER LEVEL.
4. PROVIDE TWTP OPERATION SUCH THAT WOOLSTON CAN FILL AND DRAIN.
5. INCREASE OVERFLOW HEIGHT AT WOOLSTON.
6. NEW STORAGE IN LOWER MALBEN–WOOLSTON.
7. PROVIDE PRV FROM HALE TO UPPER MALBEN–WOOLSTON.
8. PROVIDE PRV FROM FORREST ESTATES TO UPPER MALBEN–WOOLSTON.

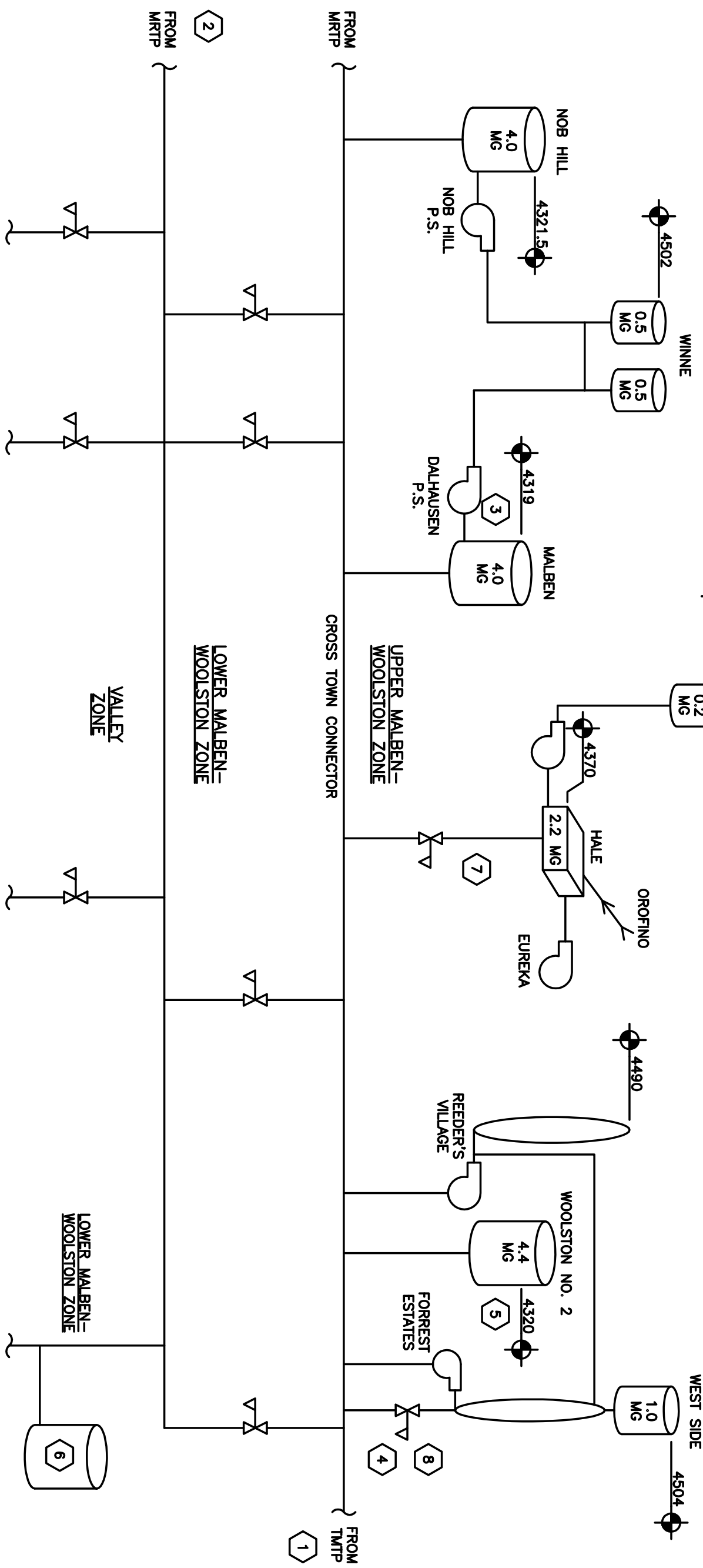

2025 STORAGE SUMMARY MALBEN–WOOLSTON

RESERVOIR	AVAILABLE
NOB HILL	4.0
MALBEN	2.7
WOOLSTON NO. 2	0.0
TTP	2.84
MRTP	0.0
TOTAL	9.54
REQUIRED	14.30
NEEDED	4.8

OPTION	VOLUME (MG)
1	1.1
2	0.8
3	1.7
4	3.1
5	4.4
6	4.0
7	1.7
8	0.5

Figure 7–5
Malben–Woolston/Valley
Zone Storage Options

City of Helena
Water Facilities Plan

HELENA MONTANA
QUEEN CITY OF THE ROCKIES
ONE COMPANY | Many Solutions HDR

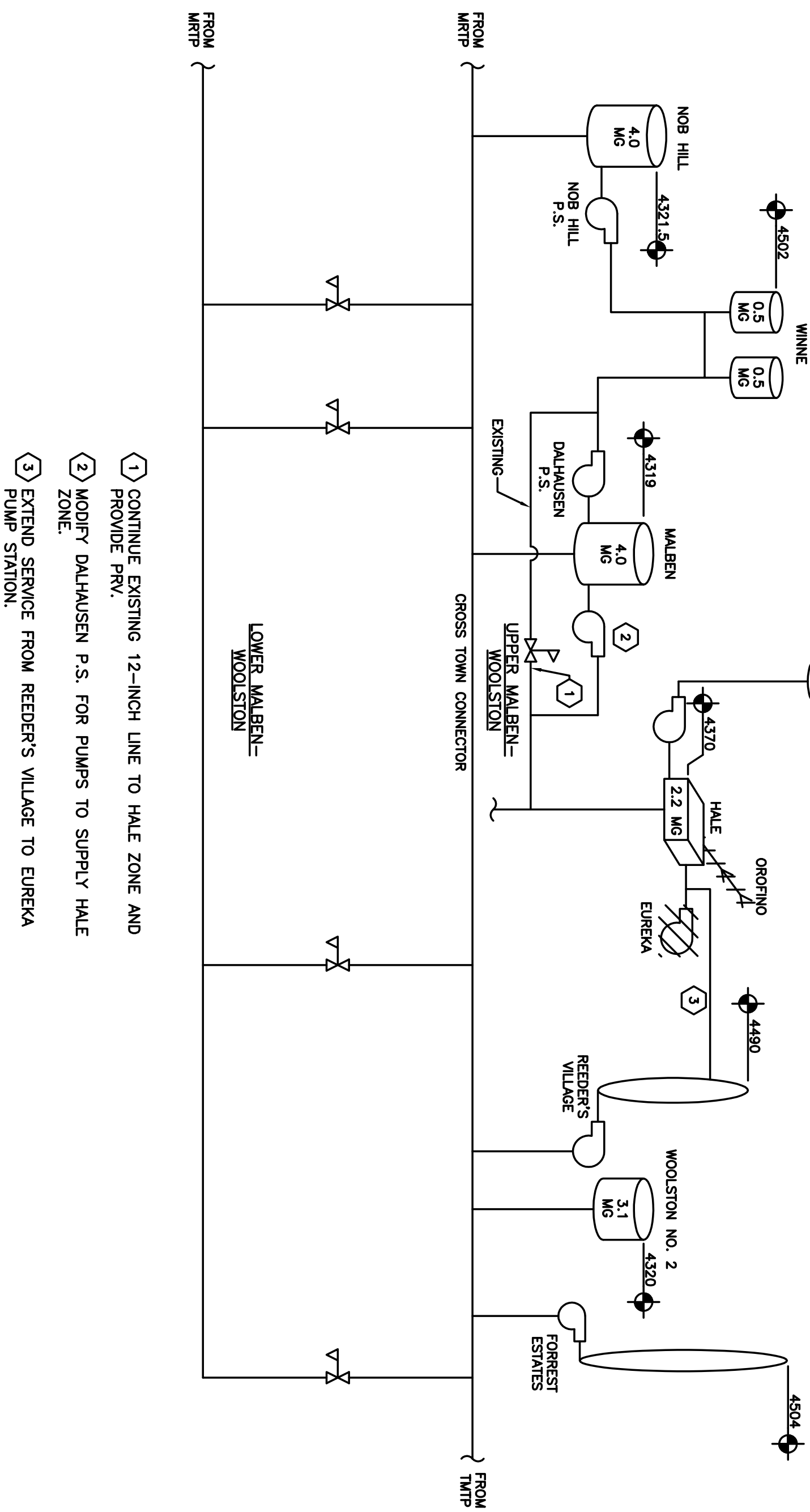

1. CONTINUE EXISTING 12–INCH LINE TO HALE ZONE AND PROVIDE PRV.
2. MODIFY DALHAUSEN P.S. FOR PUMPS TO SUPPLY HALE ZONE.
3. EXTEND SERVICE FROM REEDER'S VILLAGE TO EUREKA PUMP STATION.

Figure 7–6
Hale Zone Alternate Supply Options

City of Helena
Water Facilities Plan

HELENA MONTANA
QUEEN CITY OF THE ROCKIES

ONE COMPANY | Many Solutions HDR

Pumping Analysis

The following section reviews the capacity of the existing pump stations and their ability to meet current and future distribution system needs. Future pump stations are recommended where needed.

Existing Pump Stations

The pumping stations capabilities are summarized in Table 7-8.

Table 7-8 Existing Design Capacities of Distribution Pumping Stations

Description	Units	Criteria
Lower Malben-Woolston Zone		
Number Pumps	no.	3
Capacities	gpm	1040, 2080, 2080
Upper Malben-Woolston Zone		
Number of pumps	no.	3
Capacity, each	gpm	2080
Dalhausen Pump Station		
Number of pumps	no.	3
Capacities	gpm	700, 700, 1100
Eureka Pump Station		
Number of Pumps	no.	2
Capacity, each	gpm	400
Upper Hale Pump Station		
Number of pumps	no.	2
Capacity, each	gpm	80
Nob Hill Pump Station		
Number of pumps	no.	2
Capacity, each	gpm	900
Reeder's Village Pump Station		
Number of pumps	no.	3
Capacities	gpm	75, 150, 1750
Forrest Estates		
Number of Pumps	no.	3
Capacities	gpm.	30, 500, 500

The following summarizes recommendations for each pump station in the distribution system.

MRTP Lower Malben-Woolston Zone (Low Zone) Pump Station

Lower Malben-Woolston (Low Zone) pumping can be better utilized with a reservoir in the Lower Malben-Woolston Zone. A reservoir will avoid pumping into a closed system and, with a reservoir, a hydraulic grade line would be established based on the reservoir water elevation. With the set hydraulic grade line the Low Zone, pumps would not have to fight against the water supplied from the High Zone through the PRVs. As it is now, at low demands the Low Zone Pumps discharge pressure becomes too high soon after the pumps are turned on and the water releases back into the clearwell through the pressure sustaining valve at the MRTP (the pressure sustaining valve provides protection against too high of pressure on the waterline out of MRTP). This high pressure is likely caused by water continuing to come through the PRVs and the only way for the water to come from the MRTP is for the MRTP water to have a higher pressure. The pumps can achieve the higher pressure, but then it becomes higher than the setting on the pressure sustaining valve and relieves into the clearwell.

A potential solution to this problem that has worked in the model is to lower the downstream pressure settings on the PRVs from the Upper Zone. The lower setting will keep the PRVs closed and allow the Low Zone pumps to pump against a lower head and therefore not open the pressure sustaining valve at the plant. If this proves to work in the field, a VFD could be added to one or more of the Low Zone Pumps to help match demands in the Low Zone.

The existing pumps will be able to be used with a new above ground clearwell or the existing clearwell system. The capacities of the existing pumps match the current average day demands in the zone. Future pumps can be added as demand increases in the Lower Malben-Woolston Zone and as service area increases into the Valley Zone. Ultimately, two 1,040 gpm pumps and three 2,080 gpm pumps would provide firm capacity to meet peak demand in the two zones.

MRTP Upper Malben-Woolston (High Zone) Pump Station

Upper Malben-Woolston (High Zone) pumping would need to provide about 4,000 gpm firm capacity for 2025 demands. This is based on the MRTP delivering 13 MGD of treated water with 7.3 MGD going to the Lower Malben-Wooston Zone and the Valley Zone. The new high zone pumping will need to meet the 4,000 gpm demand and potentially provide additional capacity for redundancy in serving the Low and Valley Zones from the Upper Zones.

Dalhausen Pump Station

A new Dalhausen Pump Station would help meet storage requirements and could supply the Hale Zone. A new pump station would be designed to have sufficient suction conditions for proper operation of the pumps at the lowest level in the reservoir. A second set of pumps would provide means to supply the Hale Zone. In addition, a generator should be provided for backup power (to compensate for lack of storage in Winne Zone). One

Dalhausen pump station should be replaced.

800 gpm pump and two 1,600 gpm pumps, with a generator sized to run one 1,600 gpm pump, is recommended to meet 2025 peak hour demands.

Nob Hill Pump Station

No modifications are needed based on improvements to Dahausen pump station.

Eureka Pump Station

No modifications are needed. The pump station could be abandoned once Hale Zone is supplied by a different source.

Reeder's Village Pump Station

No modifications are needed.

Forrest Estates

There are three options for improving service to Forrest Estates: connecting to Reeder's Village, constructing a reservoir, and improving the existing pump station. In Option 1, the pump station can be eliminated if the Zone is connected to the Reeder's Village. The existing Reeder's Village pumps can meet 2025 demands for both Forrest Estates and Reeder's Village zones and provide backup power. In Option 2, a sufficiently sized reservoir would eliminate the need to upgrade the pump station as the pumps have sufficient capacity to meet peak day demands. Option 3 would upgrade the existing fire pump to meet current fire and peak hour demands. Backup power would need to be provided.

Future Pump Stations

There are two new pump stations that would strengthen the distribution redundancy. One would be a West Side pump station that would be associated with a future Lower Malben-Woolston Reservoir. This pump station would pump from the Lower to Upper Malben-Woolston Zones and would be most beneficial if the MRTP becomes the primary plant, as it would provide a second means to get water from the MRTP to the west end.

The second pump station would be at the north end of the new Valley Zone and would pump from the Valley Zone to the Lower Malben-Woolston Zone. The pump station would provide redundancy to the northern portion of the Lower Malben-Woolston Zone (north end of the North Valley planning area) and would provide means to move otherwise stagnant water through the northeastern and northern portions of the distribution system. Figure 7-7 summarizes the pumping analysis options.

Two new pump stations, one on the west end and one to the north, are recommended.

Valley Zone Analysis

The two primary ways the Valley Zone could be supplied with water is through PRVs from the Lower Malben-Woolston Zone or by pumping directly from the MRTP. Pumping from the MRTP would be the most energy efficient, but significant capital cost would be required to provide an adequate system. These capital costs include: additional high service pumping at the MRTP, piping from the MRTP to each of the north-south mains of the Valley Zone, and a reservoir. The reservoir would likely need to be an elevated tank. If adequate storage is provided in the higher zones from the options available, this tank would only need to be large enough to provide

operational flexibility with the high service pumping. For purposes of cost comparisons a 1.0 MG elevated tank will be assumed. The capital costs are summarized as follows:

- Pumping - $800,000
- Piping - $3,200,000
- Storage - $1,200,000

The estimate energy savings at 2025 would be $19,000 per year. Based on these estimates it would take about 270 years of energy savings to offset the capital costs. Therefore, PRVs to the Valley Zone are the most cost effective way to supply the Valley Zone.

Fire Flow Analysis

The City of Helena has adopted the 1997 Uniform Fire Code (UFC) by reference through ordinance and is currently reviewing the 2003 UFC for adoption by amendment. The UFC has criteria which establish minimum rates of fire flow for each building within a jurisdiction based upon the building construction type, total floor area, and fire sprinkler availability. In addition, Montana Department of Environmental Quality (MDEQ) requires that minimum pressure must be 20 psi under all conditions of flow (e.g., fire flow). MDEQ also dictates that water mains must have a minimum size of 6-inch diameter for providing fire protection and serving fire hydrants. Larger size mains will be required if necessary to allow the withdrawal of the required fire flow while maintaining the minimum residual pressure of 20 psi.

For the purposes of this analysis, a minimum zone pressure of 20 psi was used while calculating the available fire flow at each node in the hydraulic model under maximum day demand conditions.

For planning-level analyses, the City of Helena requires a minimum amount of flow to be available depending on the type of land use at a given location. Table 7-9 indicates fire flow requirements based on land use type.

Table 7-9 Fire Flow Criteria Based on Land Use Type

Land Use	Required Fire Flow (gpm)
Residential	1,000
Large Residential (>3,600 sf)	1,750
Office/Business	1,750
School	1,750
Commercial	1,750
Light Manufacturing	3,750
Industrial	3,750

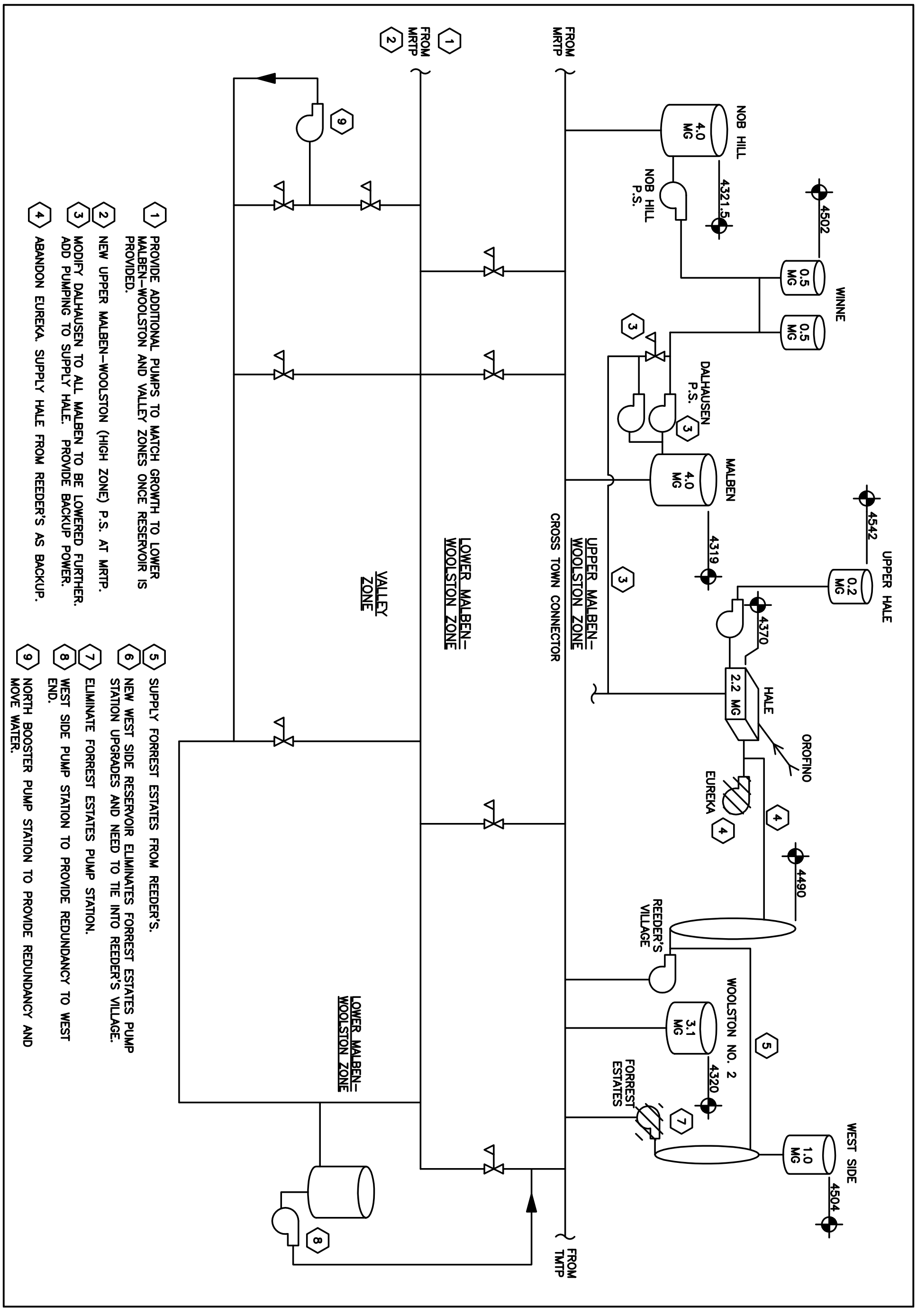

Figure 7-7
Pumping Analysis Options

City of Helena
Water Facilities Plan

HELENA MONTANA
QUEEN CITY OF THE ROCKIES

ONE COMPANY | Many Solutions HDR

Existing System Fire Flow Evaluation

As stated, the available fire flow was calculated at each node in the distribution system under maximum day demand conditions while maintaining a minimum zone pressure of 20 psi at the location where the fire flow was being calculated. Figure 7-8 provides an illustration of the resulting fire flow capacity for each node in the distribution system. To determine where fire flow deficiencies existed, the available fire flow for each node was compared to the fire flow required based on the land use classification. Figure 7-9 indicates whether the fire flow availability satisfied fire flow requirements as indicated above for current demands and Figure 7-10 for 2025 demands. Table 7-10 provides a summary of the nodes where planning level fire flow requirements were not satisfied.

Table 7-10 Percent Deficient Nodes According to Fire Flow Requirement

Land Use	Fire Flow Requirement	Total Number of Nodes	Fire Flow Deficiencies	
			No. of Nodes	Percent of Total
Residential	1,000	2,072	280	14
Large Residential/ Office/Business/ Commercial/School	1,750	1,140	152	13
Heavy Commercial/Light Manufacturing/Airport	3,750	296	184	62
Total		**3,508**	**616**	**18**

As indicated in the table, approximately 18 percent of the nodes in the system are deficient with the largest percentage of fire flow deficiencies occurring in the heavy commercial/light manufacturing/airport land use categories.

Some of the deficiencies are located in older portions of town, which have a large percentage of older pipes with low roughness coefficients (less than 60), small pipe diameters and dead-end lines. The roughness coefficients may be the biggest contributor to the reduction in the available fire flow capacity. A low roughness coefficient results in large friction losses that the system must overcome in order to supply the required fire flows. These occur largely in the southern portion of town and between Custer Avenue and the railroad tracks.

An analysis of the deficiencies within the single-family land use classification indicates that a large number of the fire flow deficiencies occurred on pipes that are not looped. In these cases, the flow must be supplied through a single source and coupled with the low roughness coefficients; the dead-end pipes do not provide sufficient fire flow capacity. Fire flow deficiencies observed on pipes having diameters that are less than 6-inches are caused by high velocities and friction losses reducing the volume of water that can be supplied in the smaller pipes.

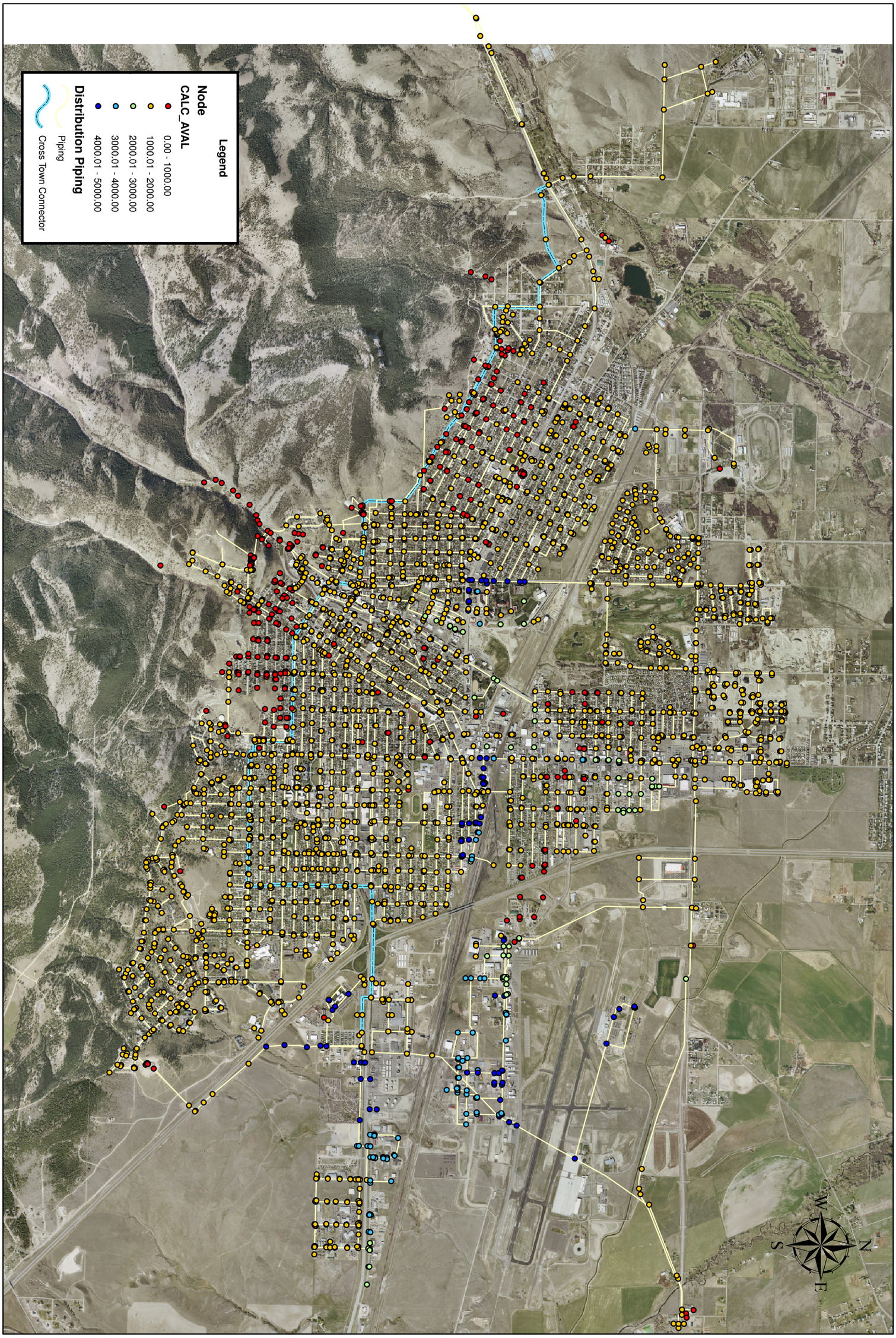

Figure 7-8
Existing Fire Flow Availability

City of Helena
Water Facilities Plan

HELENA MONTANA
QUEEN CITY OF THE ROCKIES
ONE COMPANY | Many Solutions HDR

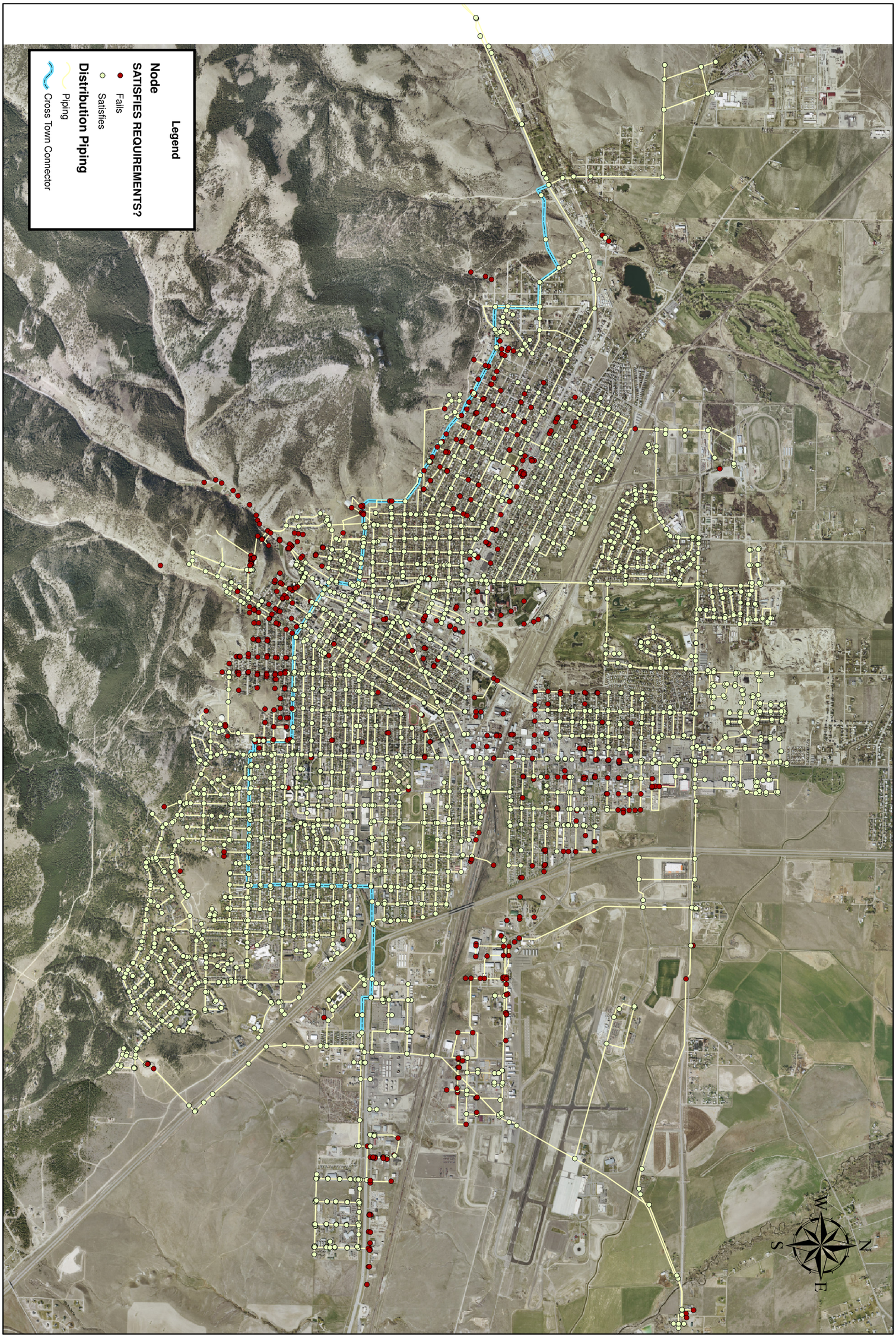

Figure 7-9
Existing Fire Flow
Analysis Deficiencies

City of Helena
Water Facilities Plan

HELENA MONTANA
QUEEN CITY OF THE ROCKIES
ONE COMPANY | Many Solutions HDR

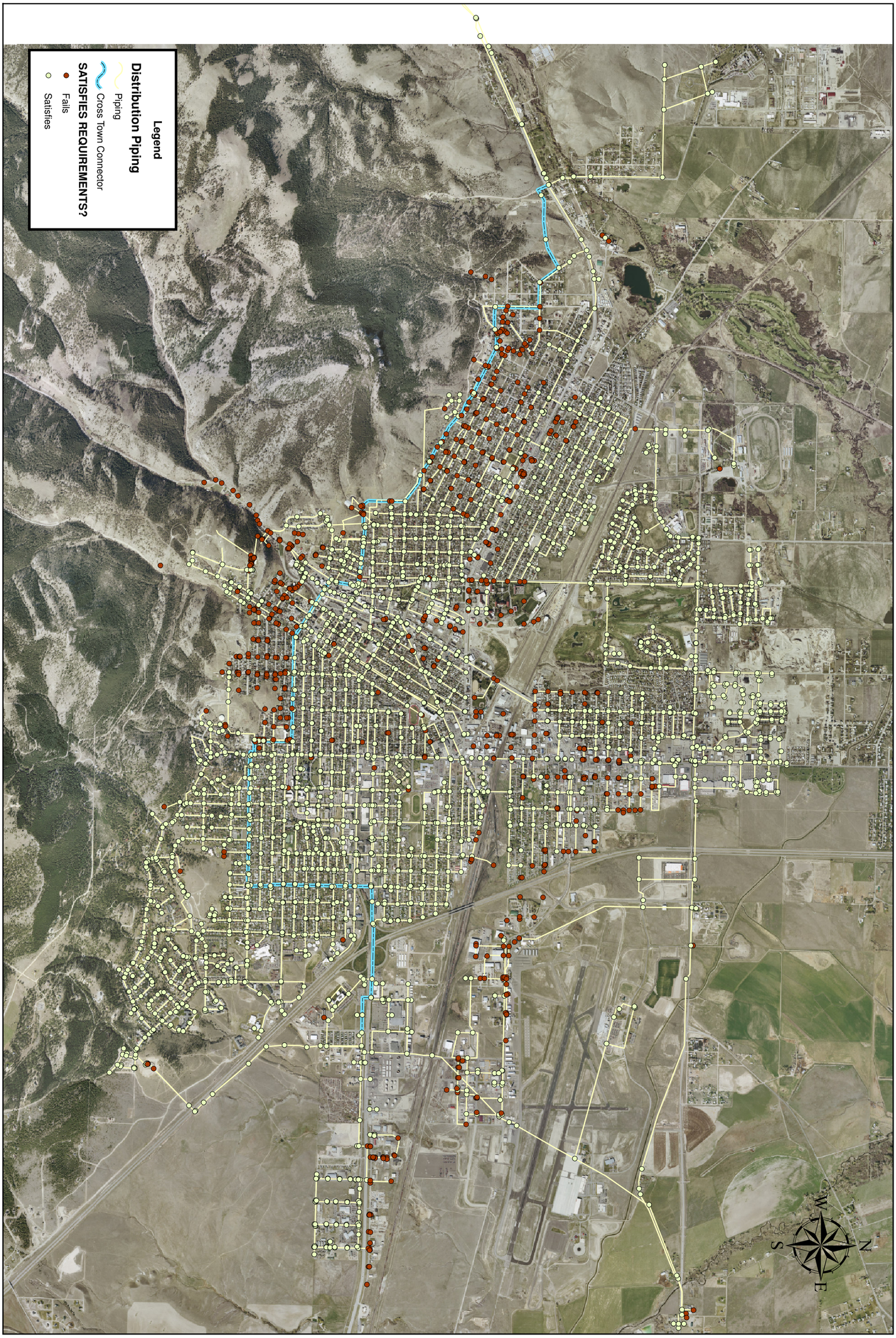

Figure 7-10
2025 Fire Flow
Analysis Deficiencies

City of Helena
Water Facilities Plan

HELENA MONTANA
QUEEN CITY OF THE ROCKIES
ONE COMPANY | Many Solutions HDR

Another area of large fire flow deficiencies is in the downtown area and surrounding commercial areas. Commercial areas require a planning level fire flow of 3,750 gpm, which is excessive for conveyance in a 6-inch or 8-inch pipeline, as pipe velocities are over 40 and 20 feet per second respectively. Although it appears that adequate looping is provided, the roughness coefficient for the majority of the pipes in the area are less than 60. While large diameter transmission pipes (i.e., diameter greater than 12-inches) are present in the downtown areas, the fire flow deficiencies that are present are occurring on the smaller diameter pipes. Similar results were observed for the industrial land use classification areas. Some of the industrial land use area deficiencies are close to the 3,750 gpm requirement (on the order of 2,750 to 3,700), but are restricted by 8-inch diameter pipe.

A large number of deficiencies occurred in dead end pipes that are not looped.

2025 Fire Flow Analysis

As indicated above, the existing system fire flow analysis identified nodes where fire flow availability is less than fire flow requirements. In an attempt to reduce the number of deficiencies, the 2025 model was evaluated with settings that were slightly different than that of the existing system. The primary difference between the two analyses was the operation of the Missouri River Water Treatment Low Zone Pump Station and the existence of a Low Zone Reservoir.

The primary difference between the existing and 2025 analysis was the operation of the MRTP Low Zone Pump Station and the existence of a Low Zone Reservoir.

The 2025 fire flow analysis did not produce significantly different results when compared to that of the existing system, with the exception of the Lower Malben-Woolston Zone. The operation of the MRTP Low Service Pump Station enabled the flow of water from both the north and south. As shown in Figure 7-10, the resulting fire flow deficiencies for each node in the distribution system is very similar to that of the current fire flow analysis, with improved fire flow availability noted in the Lower Malben-Woolston Zone. Existing deficiencies were still present, in worsened conditions, and the extent of the deficient areas expanded.

System Improvements from Fire Flow Capacity Analysis

The hydraulic analysis identified many areas within the City that do not meet the minimum required fire flow under Montana DEQ code and the proposed UFC requirements. As a result, the existing system will require many improvements to supply the required fire flow demands.

Recommended improvements to address the areas with fire flow deficiencies were run in the network model with the estimated demands for 2025. Improvements to the system were evaluated in the model by placing the planning-level fire flow demand at the deficient node and running the model to determine if the required minimum residual pressure could be provided at that location.

The recommended improvements generally consist of the installation

The recommended improvements generally consist of the installation of the new water mains, upsizing existing water mains, the rehabilitation or replacement of old, pipelines, and the rearranging of pressure zones on the south side.

of new water mains, upsizing existing water mains, the rehabilitation or replacement of old, impaired pipelines, and the adjustment of pressure zone boundaries on the south side of the system.

Many of the existing pipes within the system experience reduced hydraulic capacity, as reflected by the number of fire flow deficiencies that were detected. The roughness coefficient for a pipe is generally an indicator of the physical condition. In this case, the model calibration indicated that approximately 35 percent of pipes have roughness coefficients below 60, suggesting severe tuberculation or other conditions affecting the capacity of the pipes.

Model calibration indicated severe tuberculation or other conditions affecting pipe capacity.

In some instances, rehabilitating water mains is more expensive than providing a new source to an area. Adjustments to pressure zones are recommended in the vicinity of Le Grande Cannon, University, and at the boundary between the Hale and Upper Hale Zones. Several of these nodes, especially in 2025 and beyond, were unable to maintain residual pressures above 20 psi and impacted other nodes in the pressure zone, thus inhibiting fire flow availability in these instances.

Figure 7-11 shows fire flow improvements, including parallel water mains, rehabilitation and replacement, increasing diameter and looping. Table 7-11 provides a summary of the recommended improvements. The table includes total pipe length of improvements and estimated project costs.

The main areas of fire flow related improvements include:

- East Industrial/Manufacturing in the vicinity of the airport
- West Side
- Central Helena in CLM/M-I area
- Hale Zone
- Carroll College
- Area in vicinity of railroad tracks

Table 7-11 Summary of Recommended Improvements

Description	Length, LF	Estimated Cost
East Industrial/Manufacturing in the vicinity of the Airport	25,700	$3,000,000
West Side	36,100	$4,400,000
Central Helena in CLM/M-I	35,800	$4,300,000
Hale Zone	28,990	$3,400,000
Carroll College	4,990	$640,000
Area in Vicinity of Railroad Tracks	14,680	$1,900,000
Total	**146,260**	**$17,640,000**
	(28 miles)	

East Industrial/Manufacturing

The area in the vicinity of Airport Road is served through a PRV at Airport Road and "B" Street. The 20-inch steel line originates from the main that extends from the MRTP to the south side of Helena. The other system connection points are two 6-inch lines from the Lower Malben-Woolston areas.

The area is predominantly zoned manufacturing and light industrial and requires fire flows of 3,750 gallons per minute. The 8-inch line is not sufficient to carry this large of a flow, with only one route (the 20-inch steel line). A 12-inch line is recommended to extend from the 20-inch steel, under the interstate and connecting in near North Washington Street. Results of this replacement or parallel project would result in all nodes in this area satisfying the 3,750 gpm requirement.

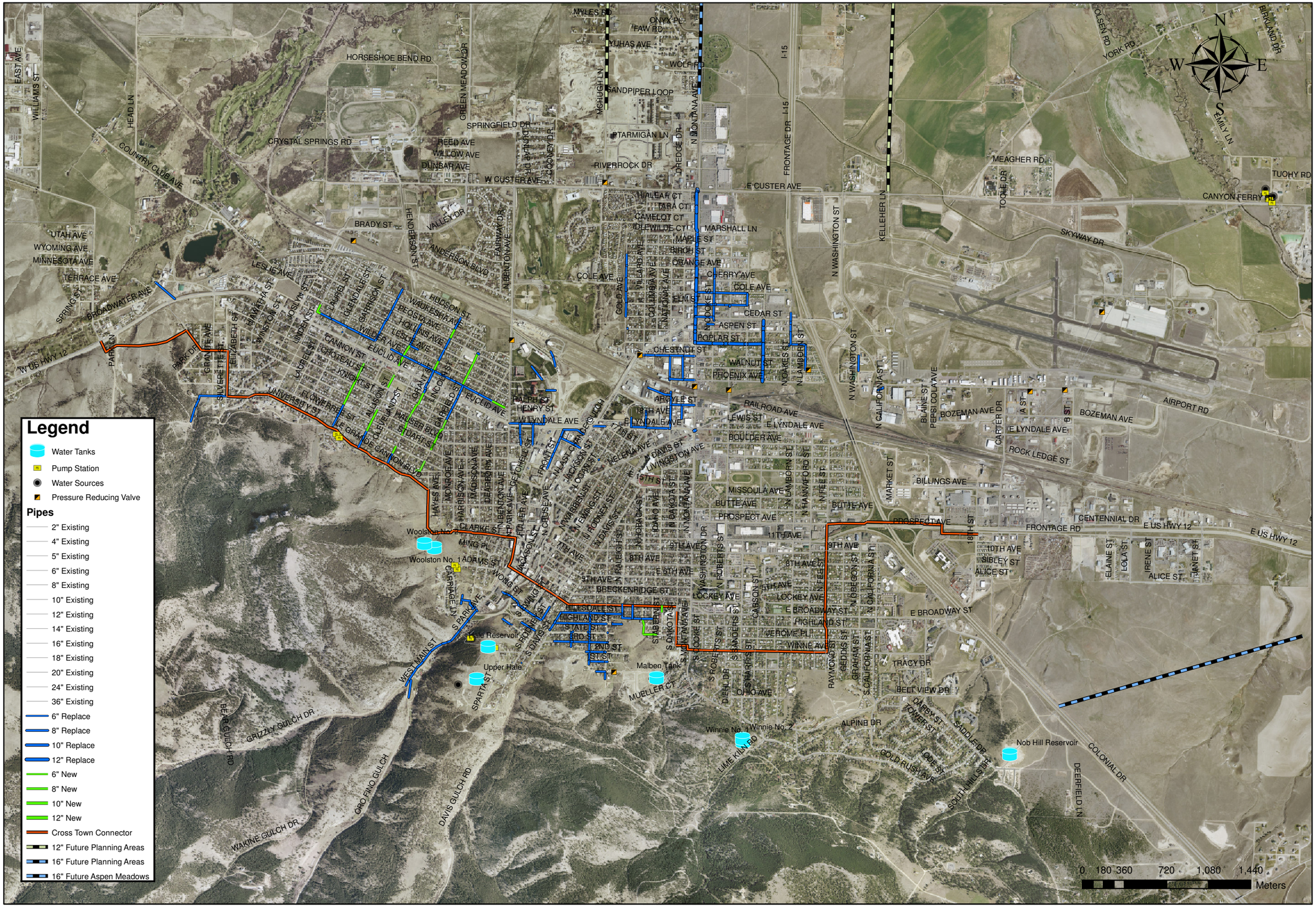

HELENA MONTANA
QUEEN CITY OF THE ROCKIES
ONE COMPANY | Many Solutions HDR

City of Helena Water Facilities Plan

Figure 7-11
Fire Flow Related Improvements

Area in Vicinity of Railroad Tracks

The area in the vicinity of the railroad tracks is predominantly zoned manufacturing and light industrial and requires fire flows of 3,750 gallons per minute. The majority of water mains in this area are 6-inch and 8-inch cast iron with low roughness coefficients, ranging from the high 30s to the low 50s. Many of these lines are not looped. In order to satisfy the 3,750 gpm requirement in these areas, projects would include replacing 6-inch mains with 8-inch and looping lines where practicable.

West Side

This area is predominantly served by older 4-inch and 6-inch mains. Required fire flows in the area range from 1,000 gpm to 1,750 gpm and include low and medium density residential, as well as general commercial zoning. An 8-inch line runs along Hauser that was installed in 1908. Twelve-inch mains extend along Le Grande Cannon and up Laurel, but there are no consistent connections between the 12-inch main and areas to the south. Areas of considerable problems are located along the older 8-inch line, at dead ends, along the 4-inch lines, and in pockets north and east of Le Grande Cannon and Laurel. Additionally, there are several dead end mains, often consisting of 4-inch line. Roughness coefficients are largely below 60, indicating older, tuberculated lines. While it is not feasible to replace all the lines in this area, strategic rehabilitation/replacement and looping would significantly help fire flows in this area. Results of these projects would result in 85-percent of the nodes in this area satisfying fire flow requirements.

Central Helena in CLM/M-I area

This area is bound by I-15 to the east, Custer Avenue to the north, the railroad tracks to the south, and the golf course to the west. During the calibration portion of this project, significant losses due to fire flows were recorded. These indicate highly tuberculated lines. Zoning in this area ranges from single family residential to manufacturing, industrial, and commercial uses. The majority of fire flow issues occur in the manufacturing and industrial areas, however, some failing nodes are located in the residential areas as well. Line sizes range from 2-inch to 12-inch, with the majority of mains in the 4-inch to 8-inch range. While it is not feasible to replace all the lines in this area in the near term, initial strategic rehabilitation/replacement and looping would significantly help fire flows in this area. Results of these projects would result in 90-percent of the nodes in this area satisfying fire flow requirements.

Hale Zone

Due to the higher elevations in this area and older 4-inch and 6-inch lines, several nodes fail to meet fire flow requirements due to the minimum 20 psi pressure constraint. Fire flow requirements in the upper portions of the zone are 1,000 gpm. Recommendations to improve fire flow availability in this area include a 12-inch line south along Beattie from State to the 12-inch line on Rhode Island. Plans for this line are already in place. Other improvements include replacing older 4-inch lines with 6-inch lines and replacing 6-inch main with new 8-inch main. According to City staff, a lot of these lines are brittle and couldn't handle higher pressures. Additionally, extending an upper zone cross town connector would help supplement flows in the zone.

Carroll College

Mains in this area consist mainly of 6-inch lines. The college consists of several multi-story buildings and has a fire flow requirement of 3,750 gpm. In order to satisfy this requirement, a 12-inch looped line is recommended, as well as increasing the 6-inch main to 8-inch main.

Distribution System Piping

The distribution piping analysis looks at improvements related to redundancy, reduction in headloss, interconnection of pressure zones and pump stations, major waterline extensions and rehabilitation projects.

Improvements to Existing System

The following summarizes additions and improvements to the existing system.

Connection of Winne to Hale

Earlier in this chapter, discussion included supplying Hale with a different water source. This provides a redundant supply of water to the Hale Zone, regardless of whether Orofino or Eureka are taken off line. This would also help with fire flow.

Connection of Reeder's Village to West Main and Eureka

As indicated in the fire flow related improvements, this connection and upgrades to West Main would provide adequate fire flow in that area. The waterline could also be connected with a PRV to Eureka to supply Hale.

Connection of Forrest Estates to Reeder's Village

This connection would eliminate the need for upgrading the Forrest Estates pump station. The connection also provides opportunity to provide homes higher pressure and adequate fire flow along Le Grande Cannon Blvd. In addition, if the West Side Reservoir is built, the reservoir would be able to serve Reeder's Village as well as Forrest Estates and subdivisions on the west end.

Parallel High Zone discharge from MRTP

The High Zone discharge is 24-inch up to the airport, 36-inch underneath the runways and taxiways, and then 20-inch to Highway 12. The 20-inch line is a primary bottle neck for flow coming from MRTP. This will only get worse as flow increases from the MRTP, especially if the Low Zone pumps continue to not be used. Headloss at 8 MGD could be reduced by 40 feet. A secondary bottleneck is the 24-inch line from MRTP to the airport. Paralleling this line with a second 14-inch line would reduce headloss at 8 MGD by about 30 feet. These two improvements would reduce discharge pressure, save energy and alleviate the reliance on a single pipeline from the MRTP.

Connect Winne Zone to Reeder's Village

This connection would result in backup power not being required for the Winne Zone. Along with the Reeder's Village Forrest Estates connection, it would also result in one pressure zone for Winne, Forrest Estates and Reeder's Village. This "upper" cross-town connector would provide some benefits in redundancy and better use of storage provisions, but is a low priority.

Parallel or Replace 12-inch Lines along Custer

This improvement becomes necessary if a reservoir is built somewhere in the vicinity of Green Meadow Drive to provide adequate flow in and out of the reservoir. It would also provide better supply to Green Meadow Drive as service area extends north.

Connection of a Potential Booster Pump Station from Lower Malben-Woolston Zone to Upper Malben-Wooston Zone

This would only be done if a reservoir is built in the Lower-Malben-Woolston Zone. This connection would provide a redundant loop between the Lower and Upper Malben-Woolston Zones.

Valley Zone Initiation

The initiation of the Valley Zone would be accomplished by installation of PRVs near the Helena Valley Canal.

Airport Area Interconnection

The airport is currently served by the High Zone with a PRV. This has caused pressure problems at the Airport when the MRTP pumps turn on. A connection to the Low Zone would alleviate this situation. As part of these improvements, a 20-inch interconnect on Washington between the 20-inch lines on Canyon Ferry and Airport Road, plus paralleling the 6-inch interstate crossing with a 20-inch line, would provide needed system redundancy and looping in the Low Zone.

Carter and Highway 12

The area east of the intersection is also prone to high pressure surges from the pumps turning on at the MRTP. Two PRVs on the two 8-inch lines would help alleviate this situation.

Monitoring PRVs

There are problems with proper operation of PRVs in the system. Adding telemetry at PRVs would allow monitoring of their operation and permit staff to better respond to problems.

Figure 7-12 shows the locations of the existing system improvements.

Future Extensions

The major future extensions will be to the north as the service areas grows. Because of the topography, two pressure zones will extend north. The new Valley Zone will include areas east of the interstate and west up to Green Meadow Drive. The Lower Malben-Woolston Zone follows Green Meadow Drive and crosses the northern portion of the North Valley. Three main lines are proposed to serve the Valley Zone. A 12-inch line along Glass Drive, a 16-inch along Montana Avenue and 12-inch on McHugh Lane, continuing to Dairy Drive. The Lower Malben-Woolston Zone would be served by a 16-inch line along Green Meadow and a 12-inch line across Valley View Road. This piping backbone would provide sufficient normal pressures as well as adequate fire flow and pressure. The future main waterlines, as well as some other interconnects, are shown in Figure 7-13.

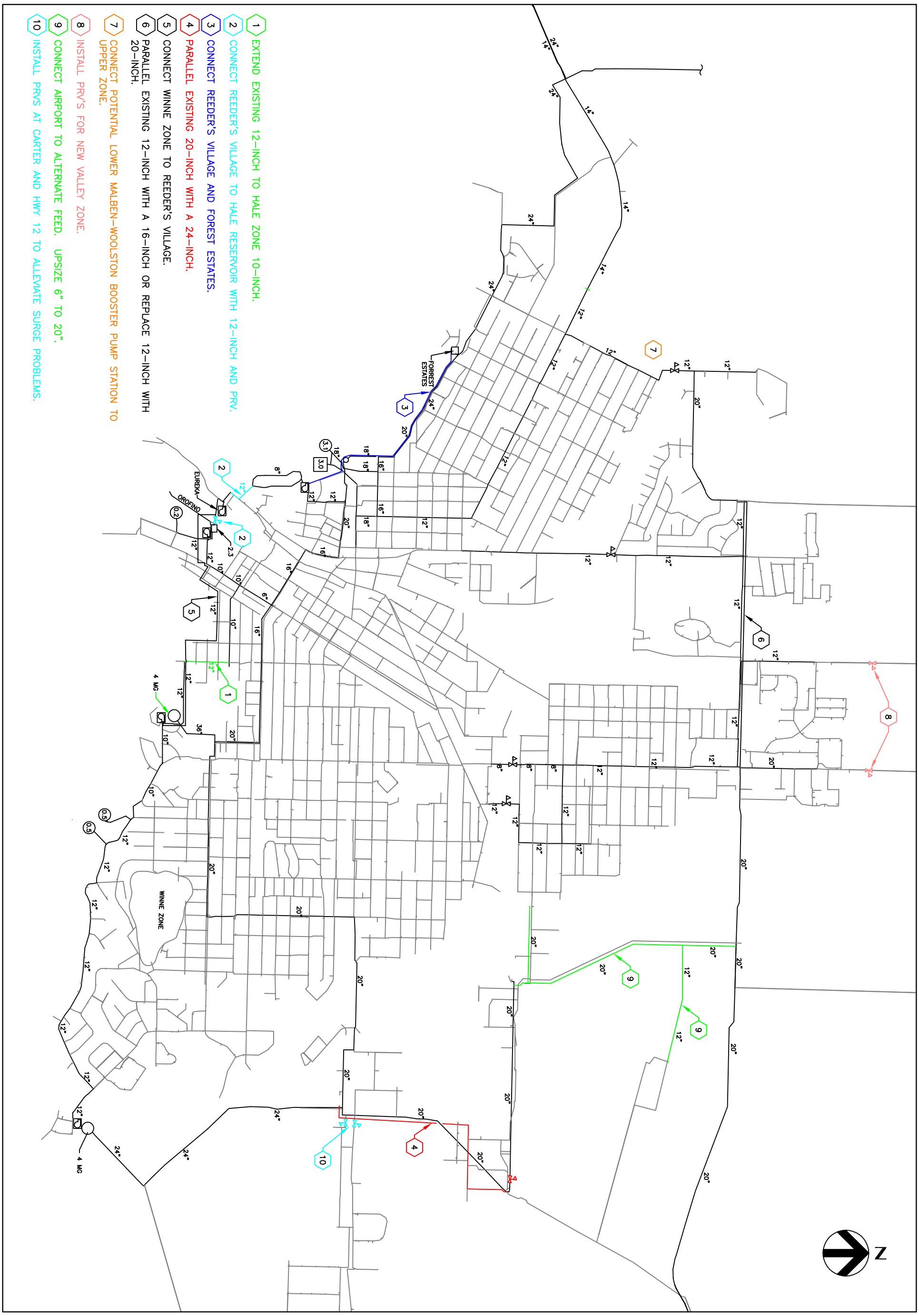

Figure 7-12
Existing Distribution System Piping Upgrades

City of Helena
Water Facilities Plan

HELENA MONTANA
QUEEN CITY OF THE ROCKIES

ONE COMPANY | Many Solutions HDR

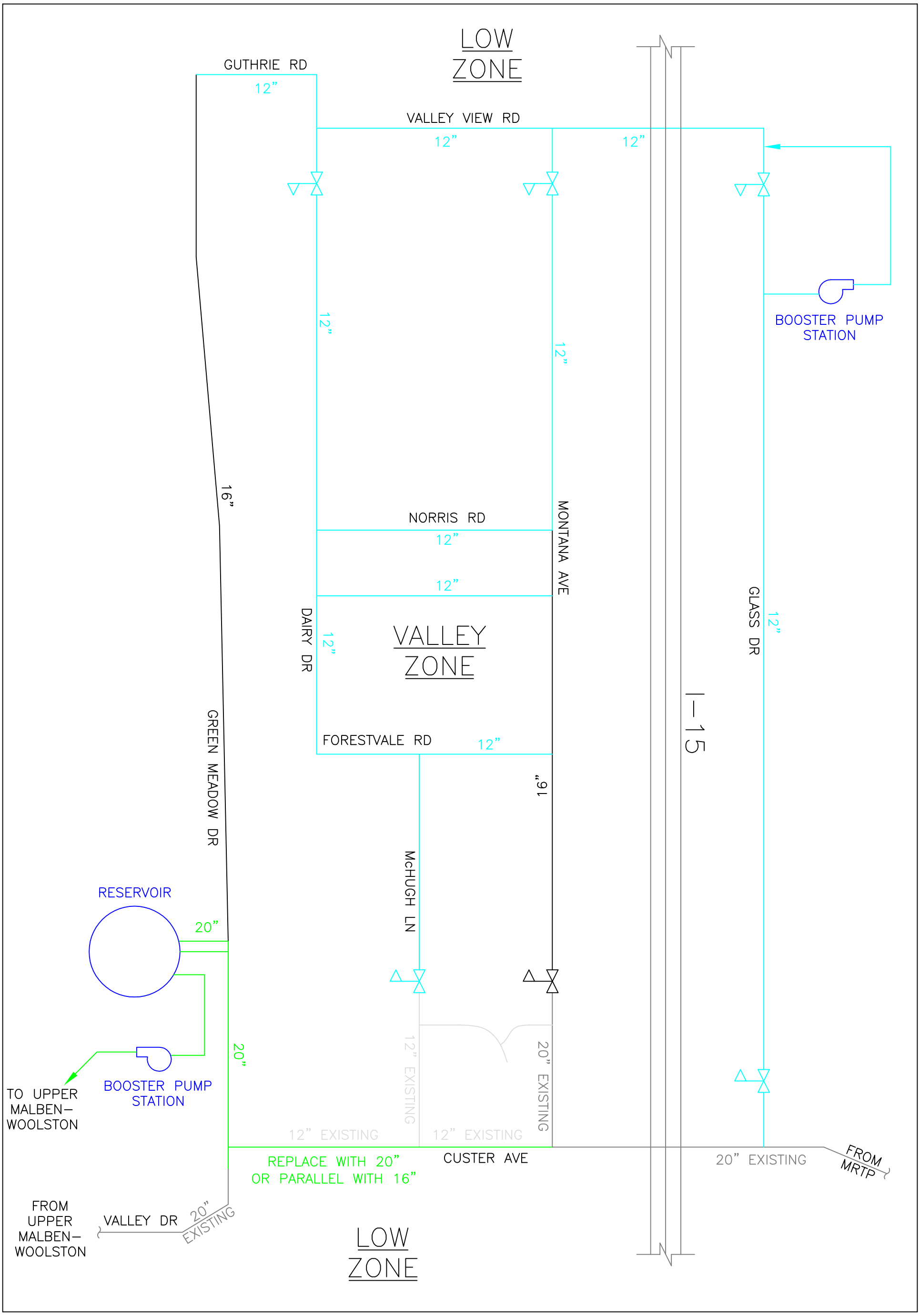

Figure 7-13
Valley Zone / Lower Malben-Woolston Future Piping Schematic

City of Helena
Water Facilities Plan

HELENA MONTANA
QUEEN CITY OF THE ROCKIES

ONE COMPANY | Many Solutions HDR

Rehabilitation and Replace Projects

Typically, replacing about 2 percent of the total system waterlines per year is an adequate goal to achieve a 50 year turnover of existing waterlines. The City has recently completed primary replacement projects. The piping replacement identified for fire flow improvements amount to 15 percent of the distribution system. No other projects have been identified for rehabilitation/replacement.

Recommendations

Table 7-12 summarizes recommended projects in order of priority.

Table 7-12 Prioritized Recommended Projects

Project	Description	Triggers	Cost
Obtain a site for Lower Malben-Woolston Reservoir	The process for obtaining land and getting public approval for a site can take several years.	Current Issue	$150,000
MRTP Low Zone Pumping	Provide VFD and analysis system operation to permit normal use of Low Zone Pumping.	Current Issue	$120,000
Connect airport to Low Zone	Alleviate pressure problems at the airport with connection to the Low Zone.	Current Issue	$450,000
Carter & Highway 12	Add PRVs to alleviate high pressures.	Current Issue	$100,000
PRV telemetry	Adding a RTU at a PRV site would be about $15,000 per site.	Current Issue	$150,000
Paralleling MRTP discharge	The 20-inch and 24-inch are bottlenecks to the High Zone from the MRTP. If the plant roles reverse, this issue becomes worse.	Current issue that worsens with role reversal	$1,200,000 (To Parallel 20”) $1,080,000 (To Parallel 24”)
Connect Forrest Estates to Reeder’s Village	Forrest Estates has the highest risk to fire. The connection to Reeder’s Village is a permanent benefit regardless of whether a West Side Reservoir is built.	Current Issue	$910,000
Connect Hale Zone to Winne Zone	This project would allow Hale to be connected to the main distribution system to allow an alternate supply.	Removal of Eureka/Orofino sources	$520,000
West Side Reservoir	Reservoir would eliminate closed loop systems for Forrest Estates, potential SW subdivisions and Reeder’s Village if interconnect between Forrest Estates and Reeder’s Village is constructed.	Expansion of system to Valley Zone	$2,100,000

Project	Description	Triggers	Cost
Upgrade/Replace Dalhausen pump station	The project could be done in two phases depending on funding. The first priority is backup power and could be an initial project. The other needs are pumps to feed Hale and pumps that allow Malben to be lowered further.	Phase I: Current Issue Phase II: Removal of Eureka/Orofino sources	$1,200,000 (or $150,000 for only backup power
Valley Zone PRVs	Install PRVs to begin defining the Valley Zone.	Current Issue	$150,000
Southwest piping improvements	The age and size of pipes in the SW part of town limit fire flow capabilities.	Current Issue	$4,400,000
Hale Zone piping improvements	The age and size of pipes in a large portion of the Hale Zone limit fire flow capabilities.	Current Issue	$3,400,000
Upgrade piping to new reservoir site.	Once new reservoir site is finalized, begin upgrades to provide an equivalent 20-inch pipe to the reservoir.	Finalize new reservoir site.	$2,000,000[a]
New Lower Malben-Woolston Reservoir	New reservoir will help meet future storage needs and allow better operation of Low Zone Pumps at MRTP.	Current Issue and Storage needs for growth.	$3,500,000
Connect West Main to Reeder's Village, Upsize Piping, Connect Reeder's to Hale.	West Main is another area with very limited fire flow capabilities. Connection to Hale provides a second supply to Hale if Eureka is shut down.	Current Issue	$200,000
Miscellaneous fire flow projects	• Carroll College Fire Flow Improvements • West Side Fire Flow Improvements • East Industrial Fire Flow Improvements • Central Helena Fire Flow Improvements • Railroad Area Fire Flow Improvements	Current Issue Current Issue Current Issue Current Issue Current Issue	$650,000 $4,400,000 $1,900,000 $4,300,000 $3,000,000
Low priority piping pump station projects	• Connect Winne Zone to Reeder's Village • Pump station and piping on west end to go from Lower to Upper Malben-Woolston	Redundancy Redundancy	$500,000 $700,000
Valley Zone Extension Projects as needed.	• Total amount of backbone piping to serve entire Valley Zone • Booster Pump Station at north end	Annexation Pressure/Stagnant Water	$24,341,000 $820,000

[a] Based on two miles of 20-inch pipe. Actual project cost will be dependant on reservoir location.

The table above represents a scenario that will meet existing, operational, fire flow and future extended service needs. There are other numerous possible combinations. The following summarizes the costs by category in order to provide an approximate magnitude:

- Operational improvements ($2,020,000)

- Storage to meet future demands ($8,950,000)
- Improvements for fire flow demands ($18,760,000)
- Hale Zone new supply ($520,000)
- Future provisions for the North Valley ($25,311,000)
- Low priority operation improvements ($1,200,000)

The estimated total cost of these improvements is $56,761,000. Total growth-related improvements total $34,261,000. Figure 7-14 summarizes the recommended distribution system improvements.

Reversing Plant Roles

Reversing the plant roles has a minimal effect on the distribution analysis since the method for meeting the 2025 peak demands is the same whether the roles are reversed or not. There are two items that become more important with the MRTP operating continuously. These are paralleling the 20-inch line south of the airport and utilizing the Low Zone pumping at the MRTP. Both are related to energy savings. To minimize energy costs of the role reversal all the demand in the Low Zone should be supplied with the pumps at the MRTP and flow from the TTP should feed the High Zone only.

The 20-inch line south of the Airport will be the primary supply of water to the High Zone. Paralleling the 20-inch with a 24-inch would reduce the pressure at the MRTP by 40 feet if the Low Zone Pumps are being used and 70 feet if only the high zone pumps are being used.

A third project would increase in importance with the role reversal only if the TTP was not run on a continuous basis. This would be the west end pump station and pipeline to go from the Low Zone to the High Zone on the west end. When all the water is being supplied from the MRTP the pressures on the very west end would drop. A booster pump station would be able to maintain the pressures.

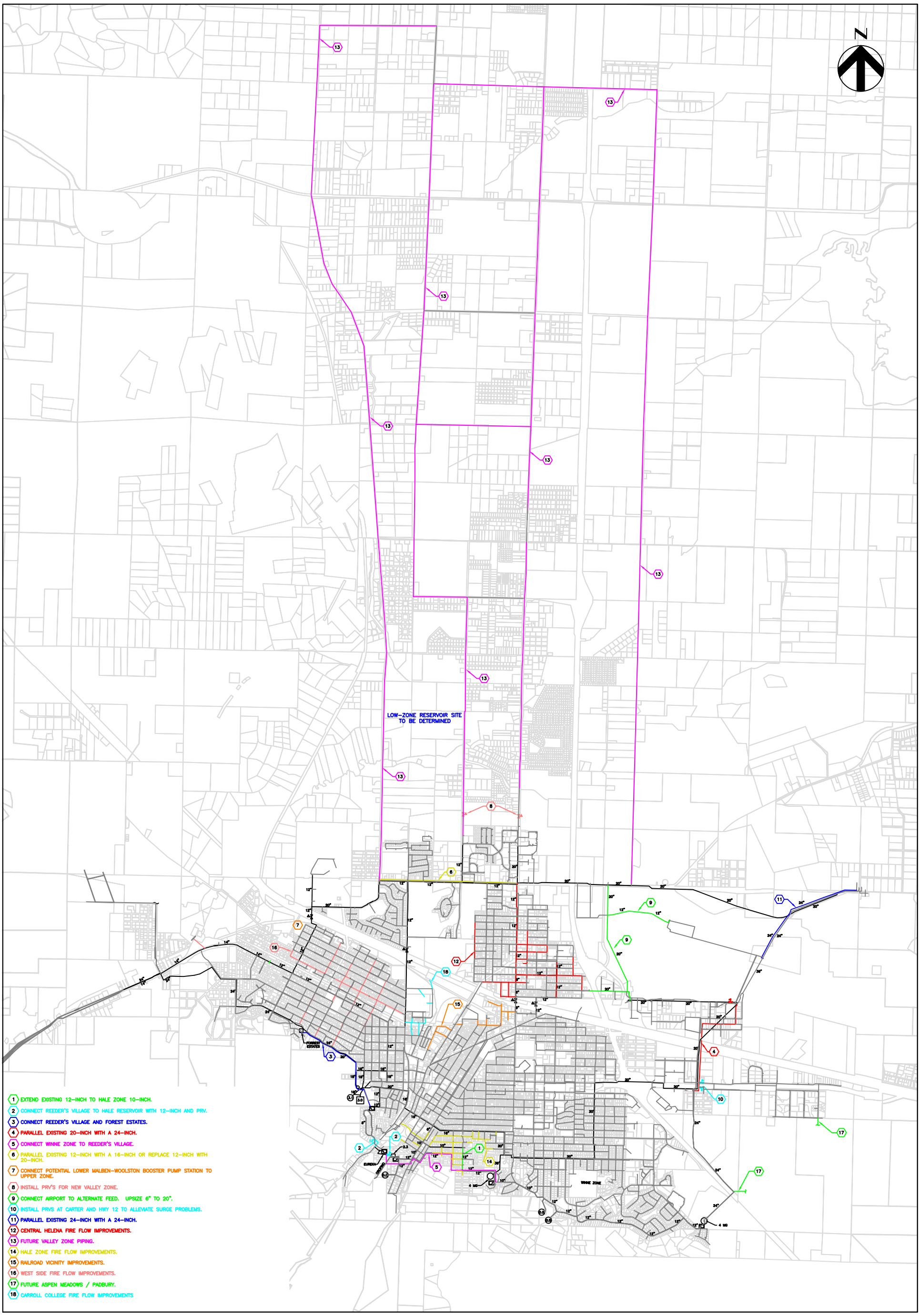

Figure 7-14
Distribution Improvements Summary

City of Helena
Water Facilities Plan

HELENA MONTANA
QUEEN CITY OF THE ROCKIES

ONE COMPANY | Many Solutions HDR

Appendix 7-A Water Distribution System Hydraulic Model

The 1999 City of Helena Water System Plan, prepared by Carollo Engineers, included the development of a hydraulic model using CyberNet™ (a.k.a., WaterCAD™) software by Haestad Methods, Inc. This model included 599 pipe segments joined by 449 junction nodes for a total pipe length of greater than 520,000 feet (98.5 miles). The model was intended to be updated with additional pipe segments as needed by the City to address site specific water delivery issues or future growth scenarios.

The City of Helena/Lewis & Clark County (City-County) Geographic Information System (GIS) staff have been maintaining an inventory of water distribution system assets in an electronic geodatabase. The City-County GIS water system geodatabase contains 3,679 individual pipe segments, 597 of which were labeled "spur" for a total of greater than 1,008,000 feet (192 miles). The current water system inventory in GIS is more detailed than the inventory used for the previous modeling effort. Therefore, in lieu of simply updating the previous model with a few new pipes, an entirely new model was constructed.

Model Setup

The hydraulic model was set up through a series of steps. These steps include:

- Review GIS geodatabase for missing data.
- Create shapefile for model junction nodes and assign elevation values.
- Define water consumption by parcel and distribute to model junction nodes.
- Connect tanks, pump stations, pressure reducing valves, sources (model reservoirs), and other features to pipes and junction nodes.

The City-County GIS geodatabase was missing attributes for pipe diameter in 1,941 individual pipe segments for a total of 511,000 feet (96.9 miles). The hard copy blue-line water system map, provided by the City maintenance crews, displays diameter for most of the water system. The missing diameters were entered into the geodatabase based upon the labels displayed on the hard copy blue-line water system map. Figure 7A-1, below, shows the geographic extent of diameters missing from the system inventory.

In some instances, water pipes and other features were missing from both the geodatabase and the previously constructed hydraulic model. This was noticeable primarily in areas that had recently been constructed, such as the Nob Hill water system improvements. These improvements were digitized based upon information shown on the hard copy blue-line water system map and the high-resolution aerial photograph.

Figure 7A-1 City-County GIS Water System Inventory Missing Diameters

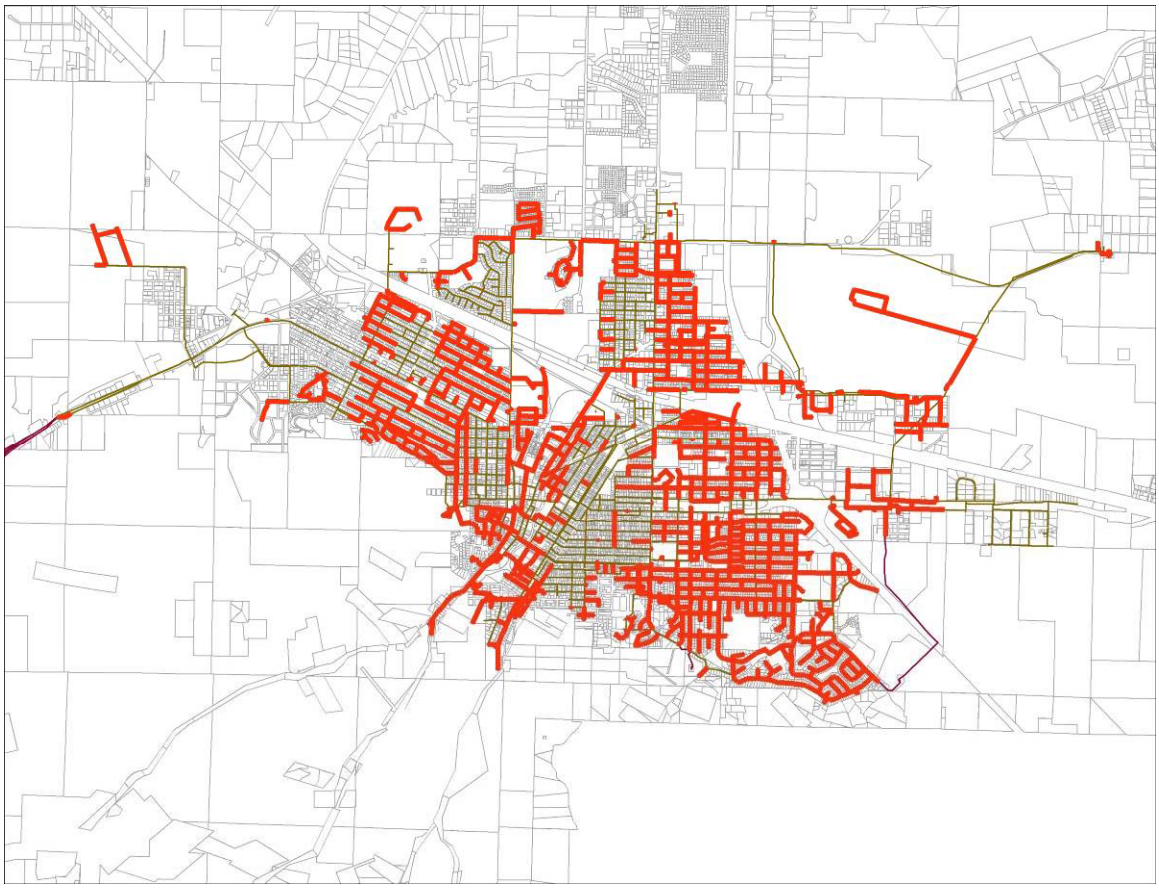

Once the water system inventory geodatabase was completely reviewed and missing data were entered, the pipe features were imported into the WaterCAD™ hydraulic modeling program. WaterCAD™ includes a routine that automatically creates new junctions at each pipe endpoint and where the endpoints of two pipes join together. In some instances, the endpoint of a pipe was located directly over the pipe alignment and did not correspond with the second pipe's endpoint. In these cases, the second pipe was split so that the two pipes could share a common junction. However, in some cases, two or more pipes may appear to intersect, but should not connect, as is the case with the high-pressure supply line to the Upper Zone from the MRTP High Service Pumping Station.

Even though the junction nodes had been created, the elevation values and system demand (base flow) values were null. A shapefile was generated from WaterCAD™ to use GIS to aid in developing these missing parameters. Elevations were assigned to the junction nodes shapefile by draping the nodes over the City-County GIS Digital Elevation Model (DEM) and extracting the elevation value of the corresponding pixel for each node. The City-County DEM contains 1-meter horizontal resolution and greater accuracy than a 7.5 minute USGS topographic survey, and thus, a substantially accurate basis of elevation data for a water distribution system model. Figure 7A-2 displays the hydraulic model junction nodes draped over a hillshade representation of the DEM and transparent aerial photograph.

Figure 7A-2 Hydraulic Model Junction Nodes Draped Over Hillshade and Aerial Photo

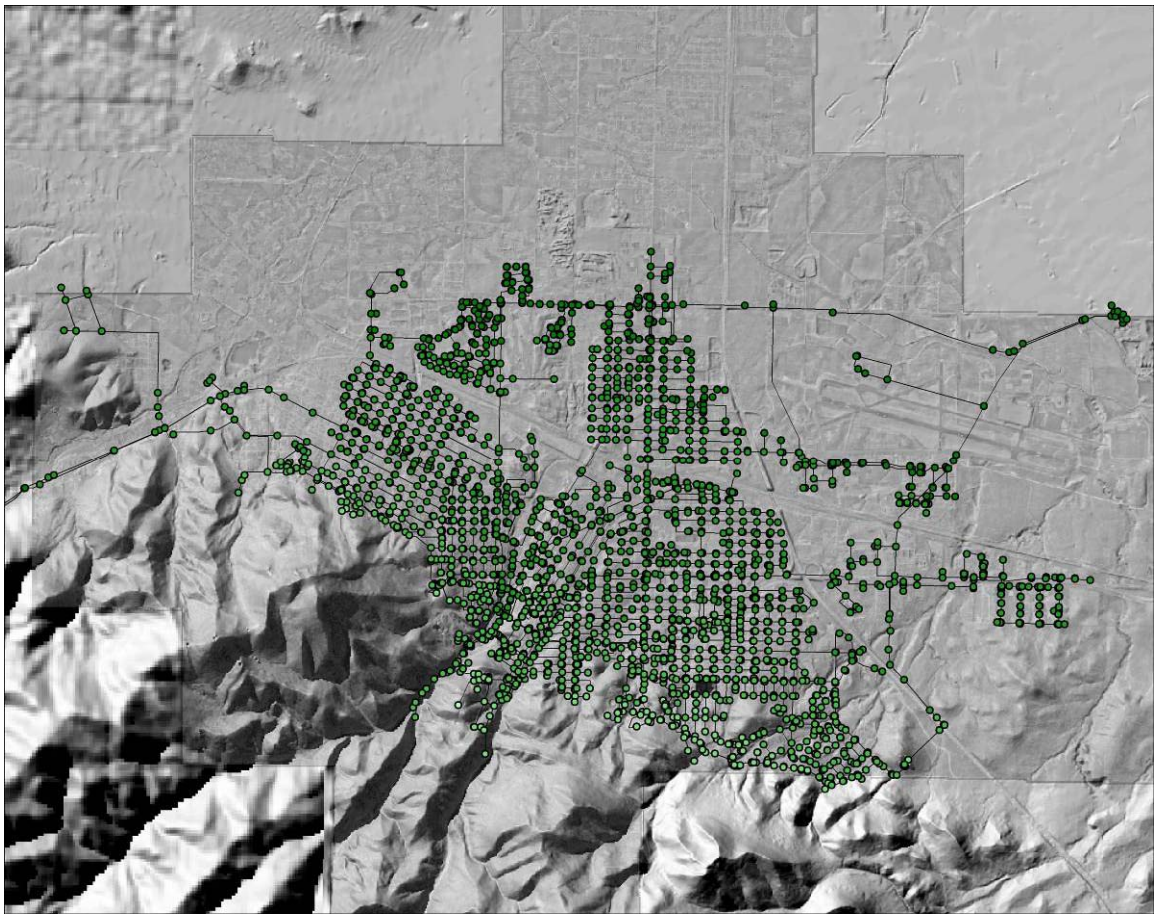

The City of Helena currently records customer billing in a database that identifies customer billing address and customer geocode identification (GeoID). For this analysis, the City of Helena provided totalized consumption in hundred cubic feet (CCF) for the year 2003 by customer. This table was joined to the GeoID for each parcel in the Lewis & Clark County parcels layer in GIS. Of 33,736 parcels, 25,407 records from the billing table were not joined to the parcels layer. The reason of this is that many of the Lewis & Clark County parcels are not within the City of Helena Water System Service Area and simply do not have billing records.

Of the 9,548 billing records, 8,329 were successfully joined to the GIS parcels layer. Many of the parcels that were not joined include State of Montana facilities that have known water consumption, but are not tracked by geographic location. The summation of the total annual consumption for 2003 billing records is 2,133,768 CCF (4.37 MGD). The summation of the total annual consumption for the 2003 billing records joined to the parcels layer is 1,624,440 CCF (3.33 MGD), a difference of 509,328 CCF (1.04 MGD). This difference was divided evenly by the remaining parcels that do not have a recorded annual consumption joined to them, but are located within the City of Helena Water System Service Area. The total annual consumption was then divided by 365 days to derive the average daily consumption for each parcel in 2003. The average daily consumption was then converted to gallons per minute for each parcel.

The average annual consumption developed for each parcel within the City of Helena Water System Service Area was distributed to the junction nodes by the Thiessen Method using another hydraulic modeling program, called InfoWater™ by MWH Soft, Inc. For this method, lines connecting the model nodes are drawn internally to the program and polygons are formed from perpendicular bisectors of these lines around each junction. The consumption values for the group of parcel centroids located within each Thiessen polygon are summated and the summation value is assigned to the corresponding junction node. Figure is a large-scale view of the City of Helena near the City Center that displays parcels, parcel centroids, water pipes, model junction nodes, aerial photo, and Theissen's polygons calculated from junction node locations.

Figure 7A-3 Demand Allocation: 2003 Consumption by Parcel using Thiessen's Polygons Method

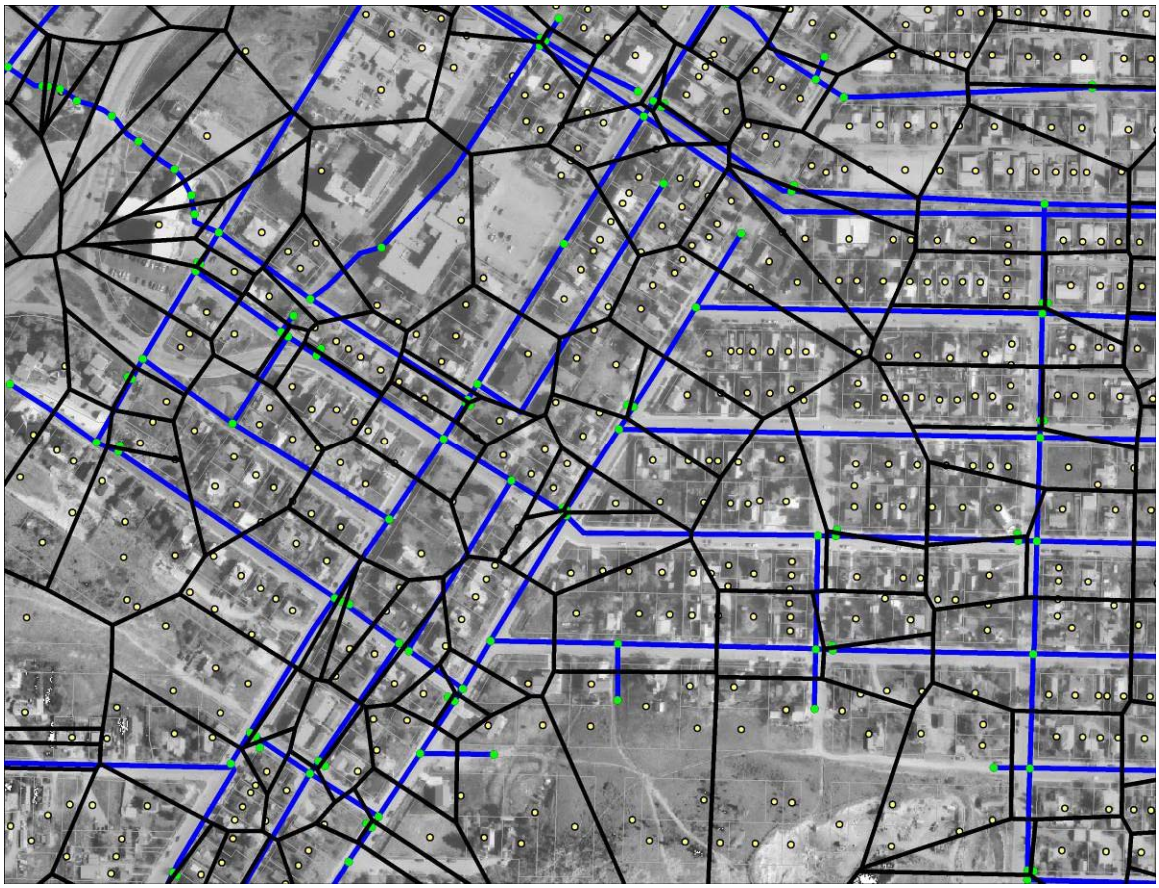

The final step in model setup is to connect the features from previous modeling, and not shown in the GIS water system inventory, to the newly constructed hydraulic model. These features include tanks, flow control valves, pressure reducing valves, pumps, and supply reservoirs. The previous hydraulic model has included settings for each of these features that can be used for setup of the new model, and where possible, the new model can improve upon the previous model's settings. For example, the High Service Pumping Station of the MRTP was modeled with three pumps. One pump was simulated as 9,000 horsepower while the other two were simulated as 1 horsepower. The new model will include the performance curves for these three pumps in lieu of assumed horsepower.

For this analysis, the Hazen-Williams formula was utilized in WaterCAD™ to calculate head loss. The Hazen-Williams pipe roughness coefficient is affected by a pipe's material, size,

and age, and by the physical and chemical characteristics of the water passing through the pipe. The City of Seattle, Seattle Public Utilities (SPU), has recently conducted empirical studies that have assessed the relationship between year of installation and the Hazen-Williams pipe roughness. The majority of these tests were conducted on 8-inch cast iron pipes older than 60 years, since these pipes have the most common diameter, material, and age in the Seattle water distribution system. Testing was also conducted on other diameter pipes to determine how the Hazen-Williams pipe roughness coefficient varies with diameter. In general, SPU had discovered that unlined cast iron pipe over 60 years in age demonstrated Hazen-Williams pipe roughness coefficients of approximately 60 and lower. Cast iron or ductile iron pipes that were produced with a coal tar or cement mortar lining were much less heavily tuberculated and demonstrated a more consistent Hazen-Williams roughness coefficient greater than 110. Plastic pipes demonstrated a consistent Hazen-Williams roughness coefficient greater than 130.

$$H_L = \frac{10.44 * L * Q^{1.85}}{C^{1.85} * D^{4.8655}}$$

Where,

H_L = Head loss (feet)

L = Pipe segment length (feet)

Q = Flow (gallons per minute)

C = Hazen – Williams pipe roughness coefficient (dimensionless)

D = Pipe diameter (inches)

The City of Helena water system contains cast iron, ductile iron, steel, and PVC (plastic). The roughness coefficients shown in Table 7A-1 were used in the initial model setup. Given the experience of Seattle Public Utilities, the primary focus of model calibration will be adjustment of the values for cast iron.

Table 7A-1: Hazen-Williams Pipe Roughness Coefficients

Pipe Material	Hazen-Williams Pipe Roughness Coefficient
Cast Iron	130
Ductile Iron	130
Steel	100
PVC	150

Model Calibration

The City of Helena tested the available flow at three fire hydrants on Wednesday, September 29, 2004. The hydrant flow tests documented the following information:

- The flow test hydrant location;
- The date of the flow test;
- The static pressure at the flow test hydrant;
- The observed flow at the flow test hydrant;
- The working pressure at the test hydrant;
- The static pressure at the witness hydrants;
- The residual pressure at the witness hydrants; and,
- The witness hydrant locations.

The City of Helena followed a standardized hydrant flow testing procedure in an effort to minimize measurement error. Only data from hydrant flow tests conducted on September 29, 2004 were used for the calibration of the model. Measurement of flow during hydrant flow tests could introduce a large measurement error. Possible sources of measurement error include poor equipment calibration, inadequate maintenance of measurement equipment, and improper placement of the pitot gauge during the flow test. The City of Helena water system maintenance crews have generally tried to keep flow and pressure recording equipment in good condition and the hydrant flows were determined using hydrant port diffusers, so pitot placement is not a factor. Also, the City of Helena acquired new digital pressure data recorders to support hydrant flow testing and for future system pressure monitoring. These new pressure recorders arrive from the factory already calibrated.

The hydrant flow tests were simulated using the hydraulic model. The hydrant that had been opened during each flow test corresponds to a hydraulic model junction node (test nodes). Similarly, the witness hydrants that had recorded static and residual pressures correspond to hydraulic model junction nodes (witness nodes). The simulated differential pressures at model witness nodes were compared with the observed differential pressures at the witness hydrants from field observations. A comparison was made between the simulated and observed data by taking the difference between the static pressure at the test hydrant and the residual pressure at the witness hydrant.

A technical paper, titled "Calibration Guidelines for Water Distributions System Modeling" (AWWA, 1999), describes several approaches to demonstration of model calibration. This paper discusses calibration for long-range planning level analyses, design level analyses, operations analyses, and water quality analyses. For development of the City of Helena hydraulic model, criteria for long-range planning level analyses and design level analyses were applied.

The calibration criteria applied for this hydraulic model are:

- The absolute difference between the pressure drop simulated in the model and that observed in the field should be less than and equal to 2 psi in 85 percent of the observations.
- For all observations, the absolute difference in pressure drop should be less than or equal to 5 psi.

The locations of hydrant flow test observations are shown in Figure 7A-4, 7A-5, and 7A-6. The observed and computed results from these tests are shown in Table 7A-2.

Figure 7A-4 Hydrant Flow Test No. 1 - Test Hydrant and Witness Hydrants

697
698
8TH
HOBACK
IDAHO
699
700
704
Witness Hydrant E
MONTANA
Witness Hydrant C
693
692
406
691
405
687
6TH
Witness Hydrant A
K
Witness Hydrant D
683
684
685
686
688
5TH
Test Hydrant #1
678
674
Witness Hydrant B
673
DAKOTA
BRECKENRIDGE
RALEIGH
669
670
671
Witness Hydrant F
LOCKEY
672
BROADWAY
ALTA
DAKOTA
665
BROADWAY

Figure 7A-5 Hydrant Flow Test No. 2 - Test Hydrant and Witness Hydrants

Figure 7A-6 Hydrant Flow Test No. 3 - Test Hydrant and Witness Hydrants

Table 7A-2 Summary of Model Calibration Results

Node ID	Hydrant Location	Flow (gpm)	$\Delta P_{Observed}$[a]	$\Delta P_{Simulated}$[b]	Difference
Hyd-685	(5th & K St)	3620	44	45	1
683 (J-301)			10	12	2
674 (J-317)			5	7	2
692 (J-401)			17	12	-5
688 (J-601)			20	19	-1
700 (J-1407)			8	5	-3
671 (J-4579)			2	1	-1
Hyd-978		2772	109	107	-2
961 (J-299)			97	96	-1
966 (J-630)			97	95	-2
962 (J-856)			98	98	0
974 (J-1293)			92	96	4

Node ID	Hydrant Location	Flow (gpm)	$\Delta P_{Observed}$[a]	$\Delta P_{Simulated}$[b]	Difference
984 (J-1469)			90	85	-5
1006 (J-4399)			58	53	-5
982 (J-1301)			99	95	-4
Hyd-94		2550	68	70	2
95(J-840)			33	34	1
577 (J-931)1			42	32	-11
91 (J-939)			34	27	-7
93 (J-1342)			41	42	1
79 (J-1862)			42	42	0
102 (J-4580)			37	35	-2
101 (J-4582)			35	38	3
204 (J-4584)			33	37	4

[a] ΔP_O = *(Observed Static Pressure) – (Observed Residual Pressure)*

[b] ΔP_S = *(Simulated Static Pressure) – (Simulated Residual Pressure)*

The roughness values were increased if the observed differential pressure was less than the simulated differential pressure, so that the internal friction of simulated pipes was smoother than that of the initial simulation. The roughness values were decreased for the regions where the observed differential pressure was greater than the simulated differential pressure, so that the internal friction of simulated pipes was coarser than that of the initial simulation.

Revision of the roughness values allows the pipe diameter to remain constant, even though the actual internal diameter of pipe in the field could be reduced due to tuberculation. Therefore, the roughness values were adjusted in the hydraulic model to meet the calibration criteria.

A correlation between the observed and computed results was established with the data in Table 7A-2. Figure 7A-7 shows the observed data versus the computed data. If the computed data correlates perfectly with the observed data, this figure would show a straight line with a 1:1 slope. This results in a correlation coefficient of 1.000. The correlation coefficient calculated for Figure 7A-7 and Table 7A-7 is 0.995. In addition, the absolute difference in pressure drop between the simulated results and the observed data is less than or equal to 5 psi for all observations, with the exception of two nodes, and the absolute difference in pressure drop between the simulated results and the observed data is less than or equal to 2 psi for 67 percent of the observations. The 0.995 correlation coefficient thus indicates a highly calibrated model.

Figure 7A-7 Hydrant Flow Test Observation vs. Simulation Correlation Plot

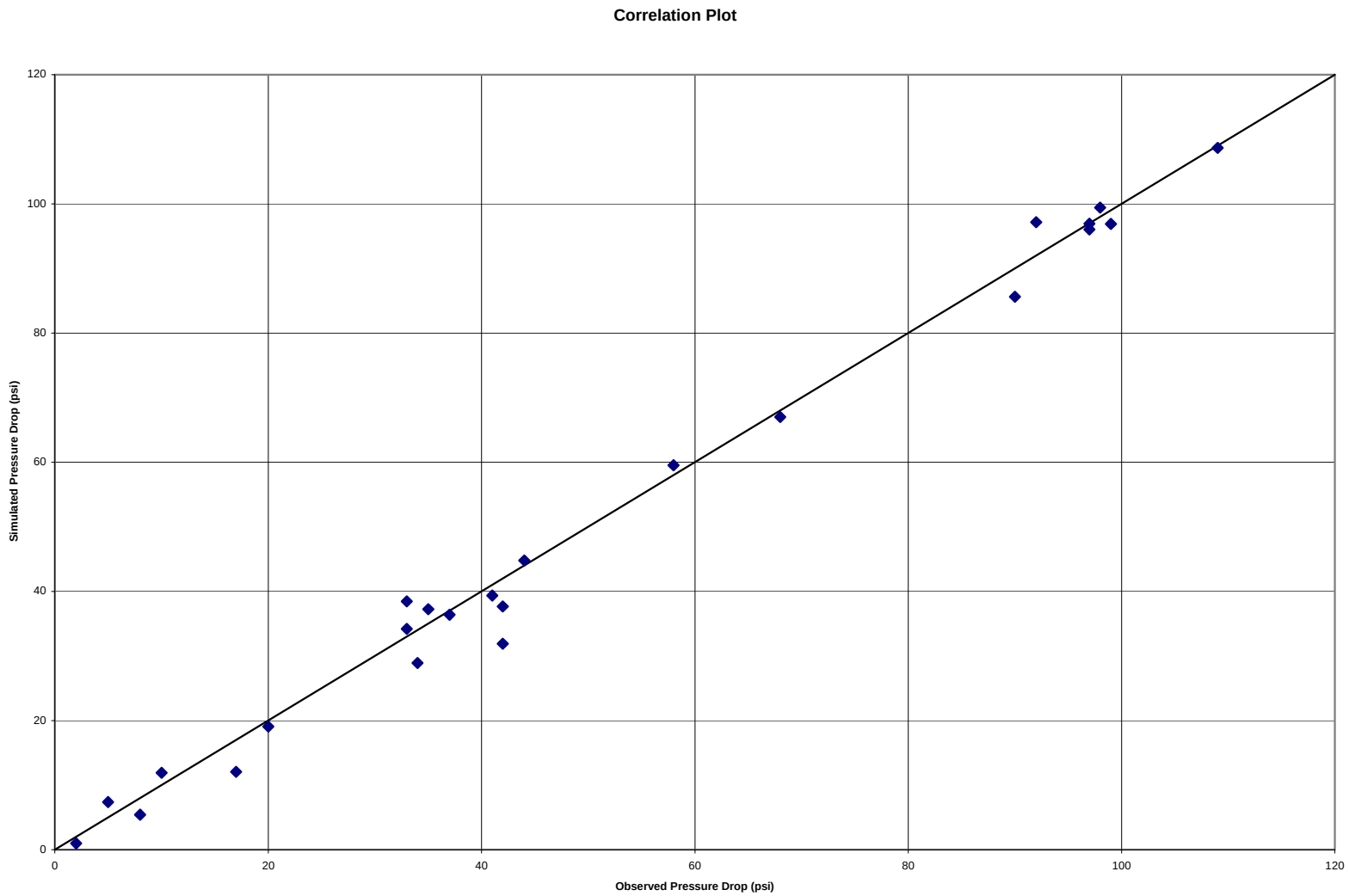

Distribution Analysis

Existing System Analysis

The 75-6-101, et seq., MCA Montana Department of Environmental Quality, Circular DEQ1, Standards for Water Works, indicates that distribution system pressures meet the following criteria:

All water mains, including those not designed to provide fire protection, must be sized after a hydraulic analysis based on flow demands and pressure requirements. The system must be designed to maintain a normal operating pressure of 35 psi. Maximum normal working pressure should be approximately 60 psi. Minimum pressure under all conditions of flow (e.g. fire flows) must be 20 psi.

Maximum Day Pressure Analysis

Initialization

In 2003, the maximum day demand was 15.7 MGD. Population and new service area projections for 2025 indicate an increase of demand to approximately 20.9, and to 27.1 MGD by 2045. Maximum day multiplier is 2.4. Due to the lack of hourly data, no peak hour multipliers were available, but a multiplier of 3.5 was estimated.

Existing System Model

A simulation of the maximum day demand conditions was run and pressures below 30 psi are indicated in Table 7A-3. The nodes experiencing pressures below 30 psi are confined to the higher pressure zones within the City of Helena specifically in the vicinity of the storage reservoirs.

Table 7A-3 Current Maximum Day Low System Pressures

Description	Number of Nodes below 30 psi	Approximate Maximum Day Pressure, psi	Pressure Zone	Services?
Woolston Reservoir Vicinity	11	23.0	Upper Malben-Woolston	Yes
Hale Reservoir Vicinity	13	3.4	Hale	No
Malben Reservoir Vicinity	1	13.7	Upper Malben-Woolston	No
Winne Tanks Vicinity	1	10.7	Winne	No
East Side Reservoir Vicinity	3	10.2	Upper Malben-Woolston	No

Woolston Nodes

Eleven (11) nodes in the vicinity of the Woolston Reservoirs have static pressures less than 30 psi. Elevations in the area range between 4261 and 4315. The average maximum static

pressure in the immediate vicinity is 23 psi. While the majority of the nodes do not have services, several homes are served in this area.

Hale Nodes

Thirteen (13) nodes in the vicinity of the Hale Reservoir and Eureka and Orofino sources, which are located at a relatively high elevation, have static pressures less than 30 psi. These nodes are located on the reservoir site and pressures below 30 psi do not extend to surrounding homes. Elevations in the immediate vicinity range between 4330 and 4360, with average static pressure approximately 3.4 psi.

Malben Nodes

One (1) node in the immediate vicinity of the Malben Reservoir has a static pressure of approximately 13.7 psi. Elevation is approximately 4477. No homes are served at this location.

Winne Nodes

One (1) node in the vicinity of Winne Reservoirs No. 1 and 2 has a static pressure of approximately 10.7 psi. Elevations in the area are about 4417. No homes are served at this location.

East Side Reservoir Nodes

Three (3) nodes in the vicinity of East Side Reservoir have static pressures less than 30 psi. Elevations in the area range between space 4294 and 4302. The maximum static pressure is 10.2 psi, with no homes served in this location.

Future System Analysis

Maximum Day Pressure Analysis

2025 System Model

A simulation was also run for the maximum day demand conditions for 2025. For the purposes of this analysis, no improvements were noted. Pressures below 30 psi are indicated in Table 7A-4. The nodes experiencing pressures below 30 psi are confined to the higher pressure zones within the City of Helena specifically in the vicinity of the storage reservoirs. This analysis did not yield a significantly different output than the current maximum day demand, with the exception of 13 additional low pressure nodes, mostly within the vicinity of Le Grande Cannon.

Table 7A-4 2024 Maximum Day Low System Pressures

Description	Number of Nodes below 30 psi	Approximate Maximum Day Pressure, psi	Pressure Zone	Services?
Woolston Reservoir Vicinity	12	20.4	Upper Malben-Woolston	Yes
Le Grande Cannon Area	11	22.4	Upper Malben-Woolston	Yes
Hale Reservoir Vicinity	13	3.4	Hale	No

Description	Number of Nodes below 30 psi	Approximate Maximum Day Pressure, psi	Pressure Zone	Services?
Malben Reservoir Vicinity	1	13.7	Upper Malben-Woolston	No
Winne Tanks Vicinity	1	13.7	Winne	No
East Side Reservoir Vicinity	3	10.2	Upper Malben-Woolston	No

Woolston Reservoir Vicinity

Twelve (12) nodes in the vicinity of the Woolston Reservoirs have static pressures less than 30 psi. Elevations in the area range between 4261.5 and 4315.4. The average maximum static pressure in the immediate vicinity is 23 psi. While the majority of the nodes do not have services, several homes are served in this area.

Le Grande Cannon Area

Eleven (11) nodes in the vicinity of the Le Grande Cannon Drive have static pressures less than 30 psi. Elevations in the area range between 4215 and 4240. The average maximum static pressure in the immediate vicinity is 22.4 psi. Several homes are served in this area.

Hale Reservoir Vicinity

Thirteen (13) nodes in the vicinity of the Hale Reservoir and Eureka and Orofino sources, which are located at a relatively high elevation, have static pressures less than 30 psi. These nodes are located on the reservoir site and pressures below 30 psi do not extend to surrounding homes. Elevations in the immediate vicinity range between 4330 and 4360, with average static pressure at approximately 3.4 psi.

Malben Reservoir Vicinity

One (1) node in the immediate vicinity of the Malben Reservoir has a static pressure of approximately 13.7 psi. Elevation is approximately 4477. No homes are served at this location.

Winne Tanks Vicinity

One (1) node in the vicinity of Winne Reservoirs No. 1 and 2 has a static pressure of approximately 13.7 psi. Elevations in the area range between 4417. No homes are served at this location.

East Side Reservoir Vicinity

Three (3) nodes in the vicinity of East Side Reservoir have static pressures less than 30 psi. Elevations in the area range between 4294 and 4302. The maximum static pressure is 10.2 psi, with no homes served in this location.