HELENA MONTANA

QUEEN CITY OF THE ROCKIES

Helena Water Facilities Plan

CHAPTER 3 – DESCRIPTION OF WATER SYSTEM

Prepared by:

Amanda B. McInnis, P.E.

Michelle Johnson

Reviewed by:

Craig Habben, P.E.

ONE COMPANY | *Many Solutions*℠

HDR

Table of Contents

Overview of Water System 3-1
Supply 3-1
Treatment 3-1
Distribution 3-1
Missouri River System 3-3
Missouri River Water Right 3-3
Missouri River Raw Water Delivery 3-3
Missouri River Treatment Facility 3-5
Missouri River Pretreatment 3-6
Rapid Mix 3-6
Flocculation 3-6
Sedimentation 3-6
Missouri River Taste and Odor Treatment 3-6
Missouri River Corrosion Control 3-9
Missouri River Disinfection 3-9
Missouri River Finished Water Storage and Pumping 3-9
Missouri River High Zone 3-9
Missouri River Low Zone 3-10
Overall Plant Capacity Summary 3-10
Tenmile System 3-11
Tenmile Water Right 3-11
Tenmile Raw Water Delivery Capacity 3-12
Tenmile Existing System 3-12
Tenmile Challenges 3-12
Tenmile Treating for Taste and Odor 3-12
Tenmile Corrosion Control 3-13
Tenmile Disinfection 3-13
Tenmile Treatment Facility 3-16
Tenmile Finished Water Storage and Transmission 3-16
Tenmile Wells 1 and 2 3-16
Hale Supply 3-19
Hale Water Right 3-19
Hale Delivery Capacity 3-19

Orofino 3-19
Eureka Well and Pump Station 3-20
Groundwater 3-20
Distribution System Description 3-21
Introduction 3-21
Water System Model 3-21
Reservoirs 3-22
Operational Storage 3-22
Emergency Storage 3-22
Fire Storage 3-22
Nob Hill Reservoir 3-24
Woolston Reservoirs 3-24
Malben Reservoir 3-24
Winne Reservoirs 3-25
Hale Reservoir 3-25
Upper Hale Reservoir 3-25
Pump Stations 3-25
Nob Hill Pumping Station 3-27
Eureka Pumping Station 3-27
Upper Hale Pump Station 3-28
Dalhausen Pump Station 3-28
Forrest Estates Pump Station 3-28
Reeder's Village 3-28
Pressure Reducing Valves (PRVs) 3-29
Piping 3-29

Table of Figures

Figure 3-1 Water System Overview 3-2
Figure 3-2 MRTP Raw Water System 3-4
Figure 3-3 MRTP Existing Treatment Process 3-7
Figure 3-4 MRTP Site Plan 3-8
Figure 3-5 MRTP Capacities 3-11
Figure 3-6 Tenmile Raw Water System 3-14
Figure 3-7 Tenmile Raw Water System Schematic 3-15
Figure 3-8 Tenmile Existing Treatment Process 3-17

Figure 3-9 TTP Hydraulic Profile 3-18

Table of Tables

Table 3-1 Raw Water Quality Summary - Tenmile Wells #1 and #2 3-19
Table 3-2 Distribution Storage Reservoir Capacities City of Helens System 3-23
Table 3-3 Existing Design Capacities of Distribution Pumping Stations 3-26

Table of Appendices

Appendix 3-A Existing Design Criteria - Missouri River Water Treatment Plant 3-30
Appendix 3-B Existing Design Criteria - Tenmile Treatment Plant 3-34
Appendix 3-C Inlet Inspection and Classification of Orofino 3-37
Appendix 3-D Missouri River Groundwater Reservation 3-38
Appendix 3-E Missouri River Water Service Contract 3-39
Appendix 3-F Model Setup and Calibration 3-40

Overview of Water System

Figure 3-1 shows the City water supplies, treatment facilities, pressure zones and backbone distribution system. The following sections will give an overview of the City water supply, treatment and distribution.

Supply

The City currently relies on three primary sources of supply:

- Missouri River
- Tenmile Creek
- Hale Collector (Eureka/Orofino)

The Missouri River and Tenmile Creek are surface water sources. They have historically supplied most (85%) of the City's demand. The Tenmile supply currently serves as a year-round source. The Missouri River source is currently used in the summer months only.

The Hale Supply is a groundwater source, served by two collectors: Eureka and Orofino. Together these two sources have historically supplied the remaining 15 percent of the City's demand.

Treatment

The City of Helena operates two surface water treatment plants, the Tenmile WTP (TTP) and the Missouri River WTP (MRTP). The TTP was constructed in 1990. The TTP uses contact adsorption clarifiers and conventional filtration for turbidity removal and gas chlorination for disinfection. The TTP is on the west end of the City. Finished water is delivered by gravity.

The MRTP was originally constructed in 1952. The MRTP uses sedimentation and conventional filtration for turbidity removal and gas chlorination for disinfection. The plant includes two pump stations (high zone and low zone) to deliver finished water.

Distribution

The City's distribution system consists of two large pressure zones and five smaller zones. The system is served by eight reservoirs and pump stations located on the south end of the City. The large zones are the Upper and Lower Malben-Woolston Zone. The five smaller zones are the Winne Zone, the Hale Zone, the Upper Hale Zone, Reeder's Village, and Forrest Estates.

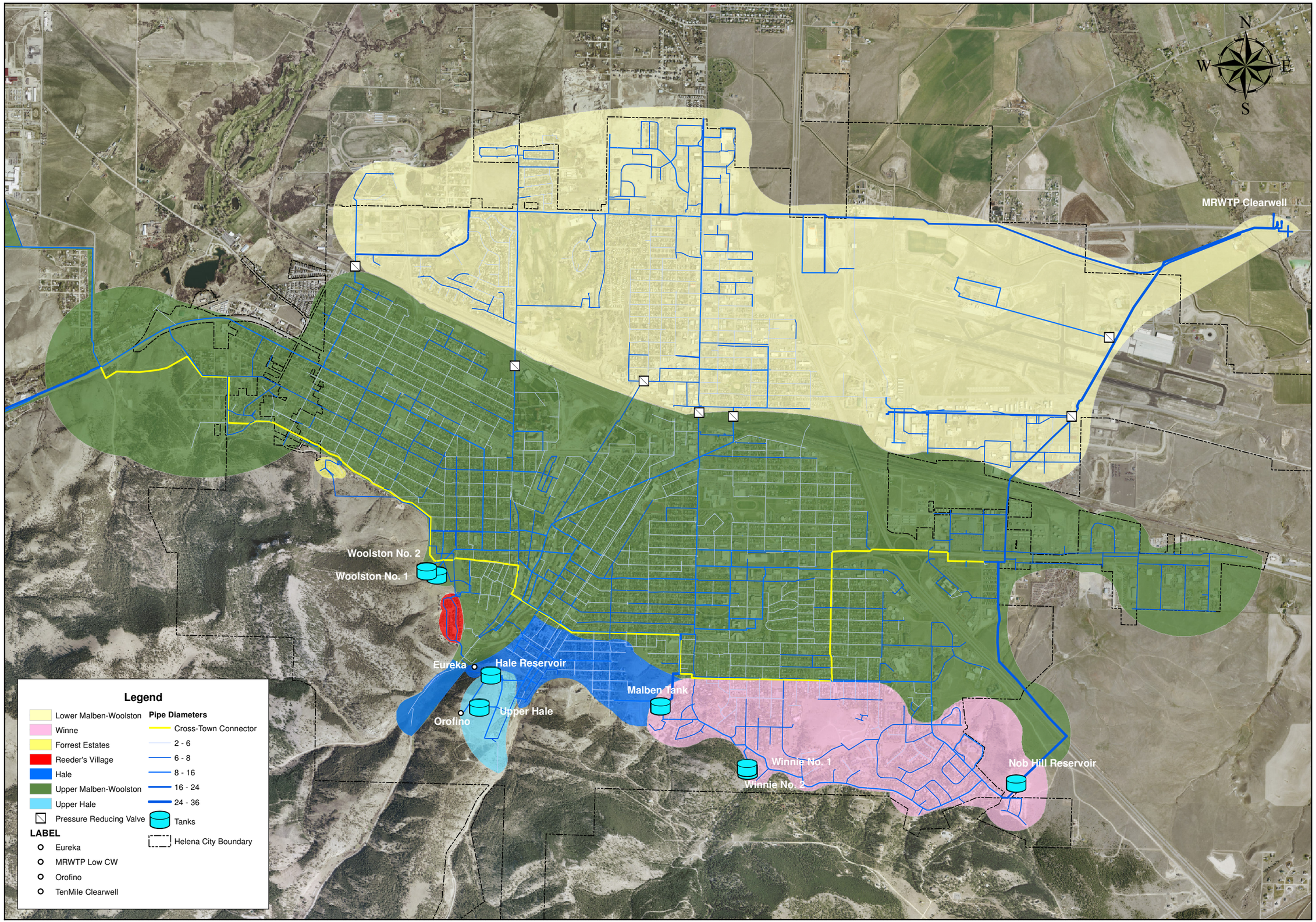

HELENA MONTANA
QUEEN CITY OF THE ROCKIES
ONE COMPANY | Many Solutions HDR

City of Helena Water Facilities Plan

Figure 3-1
Water System Overview

Missouri River System

The following section reviews the capacity and condition of the Missouri River Water System. The section follows the flow of water from the water right, to the supply line, through the treatment plant and into the distribution system.

Missouri River Water Right

The City of Helena purchases raw water for treatment at the MRTP from the United States Bureau of Reclamation as part of an irrigation project which delivers Missouri River water to the Helena Valley. The contract for Missouri River water was renewed in 2004. Additional Missouri River water may be purchased up to an annual maximum of 11,300 acre feet (10 MGD, average day).

Missouri River Raw Water Delivery

The MRTP raw water system is shown in Figure 3-2. The MRTP is located north and east of the airport. It is supplied by the Regulating Reservoir located 3.5 miles east of the plant. The Regulating Reservoir is fed by the Helena Valley Irrigation Canal from Canyon Ferry Reservoir, located 17 miles east of the City. The pumping plant at Canyon Ferry has 300 cfs (194 MGD) capacity, with two 5,000 horsepower (hp) turbine driven pumps (head is 145 feet). The pumps discharge into a 2.7 mile long tunnel (7-foot diameter), which feeds into the canal.

The maximum capacity of the raw water gravity pipeline from the regulating reservoir is 12 mgd.

The canal capacity is 300 cfs, with a bottom width of 14 feet and an average water depth of 5.5 feet. The bulk of the water (>90%) from the Regulating Reservoir is used to irrigate area farmland (estimated 17,000 acres).

Raw water flows into two intakes: one at elevation 3789.0 and one at elevation 3799.0 (estimated). A gate structure includes valves to select which intake will be operating. The intake discharges by gravity from the regulating reservoir to the MRTP in a 30-inch diameter pipeline. The existing line is steel, enamel lined, coated, and wrapped. Shell thickness varies from 3/16 to 5/16 inch. Although no major leaks have been reported, the line has not been thoroughly inspected since it was constructed in the late 1950's.

When the Regulating Reservoir is full, there is sufficient head to deliver 12 MGD to the MRTP. At low water level, the delivery capacity drops to 9 MGD. Historically, the pump station at Canyon Ferry is turned on in late March and fills the reservoir to elevation 3,820 feet, the high water level. Water is pumped from March till mid-October, with an average maximum water elevation of 3814.1 feet in July.

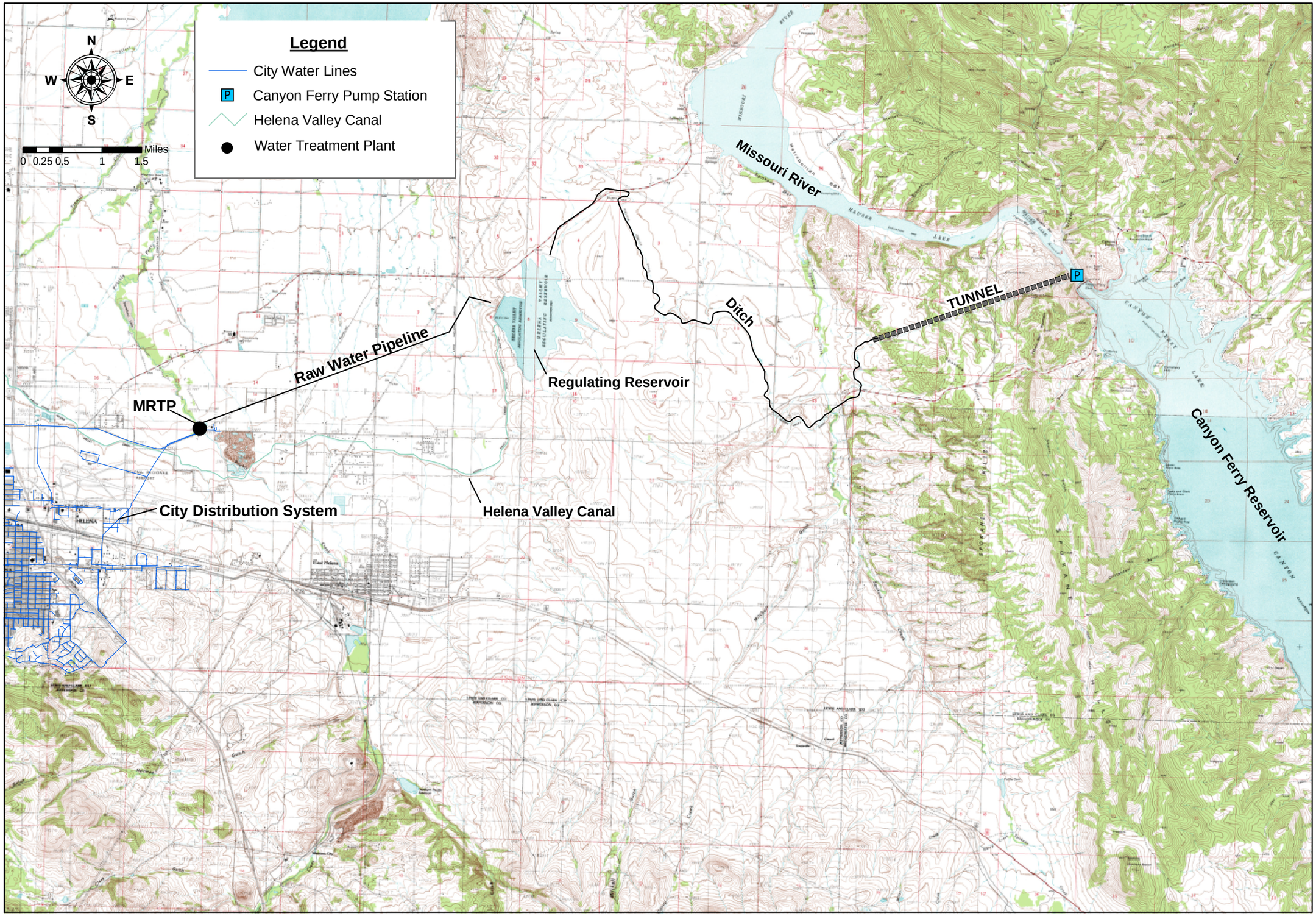

HELENA MONTANA
QUEEN CITY OF THE ROCKIES
ONE COMPANY | Many Solutions HDR

City of Helena
Water Facilities Plan

Figure 3-2
MRTP Raw Water System

Missouri River Treatment Facility

The MRTP was originally constructed in 1959 and has since undergone a series of improvements. Schematic views of the existing treatment process and site plan are shown in Figure 3-3 and Figure 3-4, respectively. Figure 3-5 shows the capacity of each component of the Missouri River facilities. The original plant included flocculation, sedimentation, filtration, gas disinfection and high service pumping. In 1972, modifications were made to the plant, with the addition of tube settlers to the sedimentation basins, and changing the filter media from sand to a mixed media of anthracite coal, sand, and garnet. In 1983, the plant capacity was expanded by adding additional flocculation and sedimentation. Also, low-zone pumping and new alum and caustic feed facilities and an additional clearwell were added. A detailed design criteria table is included in Appendix 3-A. From 2000 to 2004, the following upgrades were made to the facility:

- Filter underdrain and media were replaced in all filters.
- Filter-to-waste and air scour capability was added.
- Backwash operation was automated.
- Partial filter valve and actuator were replaced.
- A variable frequency drive (VFD) was added to one of the high zone pumps to better take advantage of finished water pipeline capacity and to conserve energy.

Even with these modifications, there is still equipment from the original 1959 construction being utilized at the plant.

Specific operational and equipment problems related to plant reliability include the following:

- The butterfly valve used for raw water control is oversized.
- The existing pumped-injection flash mix device for initial mixing of primary chemical experiences frequently clogs and is not operational.
- The raw water inlet screening structure is improperly located in the process. Screening should occur upstream of flash mix to avoid clogging of this unit.
- Plant instrumentation and automation for flow control is minimal. All flow rates, water levels, and pumping rates must be initiated manually and are therefore subject to human error, resulting in clearwell overflows and flooding.
- The powdered activated carbon feed system is hazardous to operator safety.

While the MRTP has been improved over the last five years, more improvements are needed to provide reliable supply.

These reliability and safety issues affect the ability of the existing plant to provide treated water on a firm, reliable basis. When critical mechanical equipment, such as pumps, valves, and controls, either malfunction or become inoperable, the plant is unable to deliver water into the system.

Missouri River Pretreatment

The pretreatment processes at the plant, consisting of coagulation, flocculation and high rate tube settlers, do not perform adequately due to equipment failure and current water flow configuration. Turbidity levels are not reduced significantly during pretreatment, even with 50 ppm alum doses.

Rapid Mix

The rapid mix utilizes a pumped jet-type mixing. It is not currently being used due to issues with frequent pump and nozzle clogging from fish, frog and other debris. In place of the rapid mixer, the coagulant is added by a secondary chemical diffuser in the raw water control box, which does not allow for effective mixing.

Flocculation

The existing flocculation basins consist of two trains that are designed to treat 6 MGD each, for a total of 12 MGD. There are a number of problems that lead to ineffective flocculation, including:

- The existing basins have two stage flocculation, which is not sufficient for promotion of large particle formation.
- Excessive flocculation and floc shear occur at flows less than 8 MGD.
- The existing exterior basins are covered, preventing visual assessment of the flocculation process.

Sedimentation

There are three existing sedimentation basins utilizing high rate tube settlers, which are designed to operate at rates greater than 2 gpm/sf. These basins, however, tend to not operate effectively at higher loading rates and require significant maintenance. The flow is also not evenly distributed through the settler module, so algal growth and scale tend to develop, requiring cleaning.

Missouri River Taste and Odor Treatment

Taste and odor have occurred in the Regulating Reservoir in the late summer and early fall. These episodes have historically been treated with the addition of potassium permanganate at the Regulating Reservoir and activated carbon at the treatment plant in an attempt to oxidize and adsorb some of the undesired compounds from the treated water. This issue has been mitigated in the past by shutting down the plant once taste and odor problems are detected in the distribution system and operating solely from the Tenmile supply.

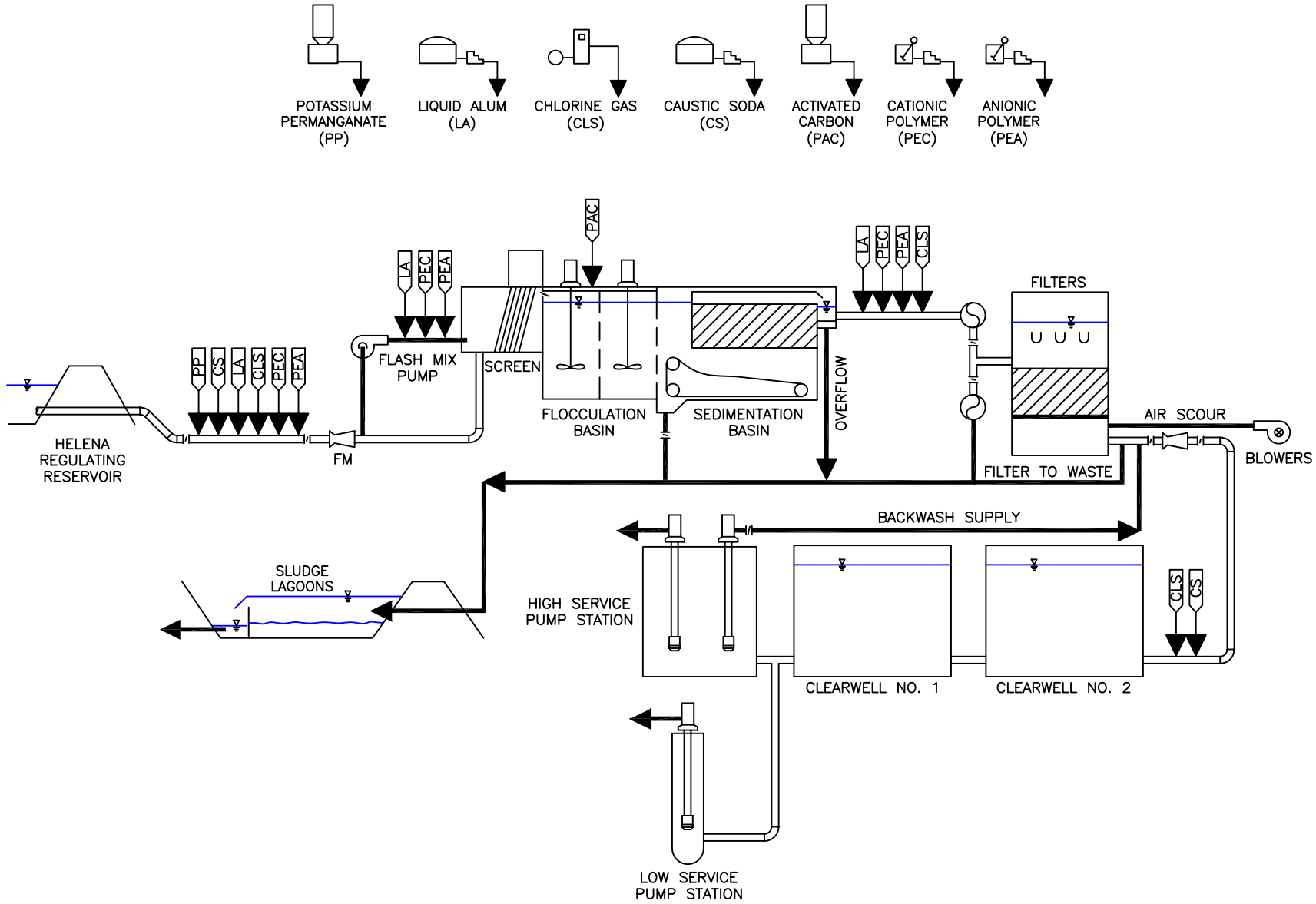

Figure 3–3
MRTP
Existing Treatment Process

City of Helena
Water Facilities Plan

HELENA MONTANA
QUEEN CITY OF THE ROCKIES

HDR
ONE COMPANY | Many Solutions

Figure 3–4
MRTP Site Plan

City of Helena
Water Facilities Plan

HELENA MONTANA
QUEEN CITY OF THE ROCKIES

HDR
ONE COMPANY | Many Solutions

Missouri River Corrosion Control

There is currently no need for corrosion control chemical addition at the MRTP due to the low corrosivity of the source water and the fact that the facility is usually in operation along with the TTP where corrosion control chemical is added.

Missouri River Disinfection

The final step in the treatment process is disinfection. Disinfection is currently accomplished with the addition of chlorine gas to the finished water. The average residual for the plant is approximately 1.2 mg/L. There are, however, operator safety issues observed at the existing plant related to the chlorine storage and feed facilities. Specific issues include:

- Current safety code violations;
- Inadequate and malfunctioning leak detection system;
- Non-functioning ventilation system; and
- Need for emergency gas scrubber or approved containment vessel.

Missouri River Finished Water Storage and Pumping

There are two existing clearwells, each 200,000 gallons. The clearwells are undersized for both equalization and obtaining contact time (CT) credit (required for 0.51 log Giardia inactivation) for chlorination at the design flow rate. At current doses, proper disinfection is not obtained at plant flow rates above 7 MGD. There are also health concerns caused by clearwell overflow and flooding of the adjoining pipe gallery and pumping station. The clearwell does not have a suitable structure for positive overflow control and the gallery floor drains are piped within the existing clearwell structure.

There are two finished water pumping stations at MRTP: a high zone station and a low zone station. A single 24-inch line runs from the high service station into a 36-inch line at the airport and then to a 20-inch line into the distribution system. A 20-inch line runs from the low zone pump station west along Canyon Ferry Road, passing the City wastewater treatment plant.

The High Zone pump station and clearwell at MRTP limits capacity.

Missouri River High Zone

The high zone pumping station (HZPS) at MRTP consists of three 400 hp vertical turbine pumps, each rated at 3 MGD capacity. Normally, two pumps are used for service with one as standby. Each pump is equipped with a pneumatically operated pump control valve that functions to allow the pump to start and stop against a closed valve. In 2000, a variable frequency drive was added to one of the pumps.

The HZPS also includes a large surge control tank designed with an oil/water interface to divide the air chamber from the water chamber. There is no instrumentation or control system on the surge tank and the oil interface has been discharged into the distribution system on occasion due to control problems. There is

a flow meter on the discharge of the HZPS and a flow signal is transmitted back to the PLC for display.

The major problems with the HZPS are the age and condition of the pumps and motors. The insulation in the motors is severely deteriorated. It is believed this is due to moisture that condenses in the motor during winter when the plant is off line and the building is cold. The motors were rebuilt in 2005 to improve reliability.

Missouri River Low Zone

The low zone pumping station (LZPS) delivers water to the Lower Malben-Woolston Zone. This station consists of one 1.5 MGD capacity pump and two 3 MGD pumps. The motor horsepowers are 125 and 300 hp, respectively. The station has provisions to add one additional pump. The pumps are manually started and stopped locally as water demand for the low zone changes. The station pumps into a closed pressure zone with no reservoir storage tanks.

The Low Zone Station is rarely used due to clearwell levels and too large of pump capacity.

There are several problems associated with the LZPS. The pumps cannot be operated if the level in the clearwell is below 4 feet of depth (the clearwell is 6 ft deep total). If the level falls below this depth, the pumps will not receive adequate water from the clearwell. The low zone pumps are oversized for demands typically experienced in the low pressure zone. Therefore, when a low zone pump is turned on, the pressure on the discharge soon increases above the maximum set point and a pressure sustaining valve opens dumping water back into the clearwell. As a result, the station is ineffective and is seldom operated.

Overall Plant Capacity Summary

Figure 3-5 shows the rated capacity of each component of the MRTP. The following describes the systems issues:

- The raw water pipeline capacity is 9 MGD at low pool, 12 MGD at full pool.
- Pretreatment has 12 MGD of capacity, but is ineffective.
- Filters have 13.6 MGD of capacity (at a loading rate of 5 gpm/sf) with improved pretreatment.
- Clearwell capacity is limited to 7 MGD.
- Finished water pumping capacity is 9 MGD, with high zone only. Low zone pumping is not included because it cannot be used regularly.

Figure 3-5 MRTP Capacities

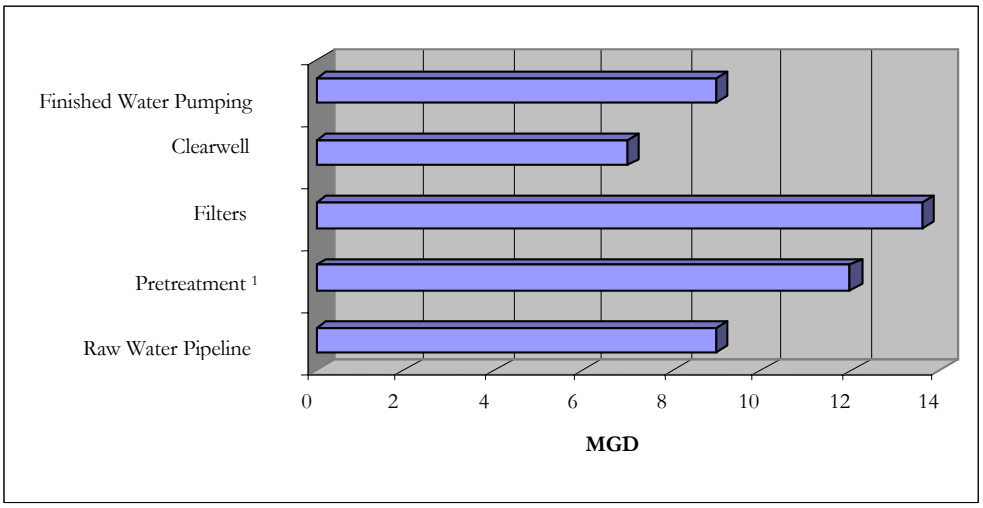

[1] Pretreatment has 12 MGD capacity, but is ineffective.

Tenmile System

The following section describes the Tenmile water system capacity and condition. The section follows the flow of water from the water right, through the raw water supply system, through the treatment plant and into the distribution system.

Tenmile Water Right

Water rights on Tenmile Creek used by Helena date back to 1864 and 1865 and are among the first water rights filed in the State of Montana. The City of Helena purchased the water rights and all existing transmission and treatment facilities from the Helena Water Works Company in 1911. The water in the Tenmile Creek drainage was first adjudicated in 1903 and amended in 1966 to settle a dispute over water rights between the City and agricultural users in the Helena area. As a result of adjudication and amendments, supply line capacity limitation, and hydrological limitations of the dependable annual water supply from Tenmile Creek, the City can use up to about 1,960 million gallons per year (MG/yr), or 6013 acre-feet (ac-ft) per year.

Scott Reservoir provides storage in the Tenmile drainage.

Tenmile Raw Water Delivery Capacity

Tenmile Existing System

Red Mountain Canal conveys water from Banner Creek to Chessman Reservoir for storage.

The existing facilities for the Tenmile Supply include two mountain reservoirs and one canal. The Tenmile Raw Water System is shown in Figure 3-6. The two mountain reservoirs, Chessman and Scott, have a total combined capacity of 744 MG (2283 ac-ft), or 550 MG (1688 ac-ft) and 194 MG (595 ac-ft), respectively. Chessman is supplied by runoff from the Beaver Creek drainage and by diversion from Banner Creek through the Red Mountain Canal. Scott Reservoir is supplied by runoff from the Ruby Creek drainage. Water is discharged from these reservoirs into Beaver or Ruby Creek and is captured at the intakes to the TTP on Tenmile and Beaver Creeks south of Rimini. Other intakes to this line exist on Minnehaha, Moose, and Walker Creeks. The supply line to the treatment plant is 18-inch concrete.

Chessman Reservoir provides 194 MG of storage.

Red Mountain Canal consists of approximately 13,000 lineal feet (LF) of open unlined ditch, 11,800 LF of sheet metal flume and 500 LF of pipeline. The flume was rebuilt in 1988. The sheet metal section of the flume leaks significantly. The approximate capacity of the flume and pipeline is 9 MGD.

The raw water intakes for the TTP are shown in Figure 3-7. There are a total of 6 diversions that move water from the creek to the conveyance pipe that feeds the TTP. Each intake is upstream of Rimini Superfund site or on a creek feeding Tenmile Creek.

Tenmile Challenges

There are several challenges in the Tenmile raw water delivery system. The deliverable wintertime flow rate to the TTP is often limited due to low stream flow and freezing conditions in the raw water conveyance channels. As the water freezes, it either does not reach or cannot enter into the raw water intake for conveyance to the plant. The TTP shutdown during the months of March and April in 1997 was due to low stream flow and icing conditions. During that time, the City was supplied water from the Missouri River Plant which normally operates only during the summer.

Tenmile Treating for Taste and Odor

Historically, algae and taste/odor compounds have been effectively managed at the TTP. A significant algae population can be found in Chessman Reservoir every year. Each July, City staff adds 10,000 pounds of copper sulfate to control it. In addition, 0.5-1.5 ppm powdered activated carbon is added at the TTP whenever Chessman Reservoir is in service to further control taste and odor compounds.

Tenmile Corrosion Control

Based on the chemistry of the source water for the TTP, a corrosion control chemical is applied at the TTP. Until early 2004, when the City wastewater treatment plant began exceeding their limit for zinc, zinc orthophosphate was added. The City then moved to an ortho/poly-phosphate blend, which is added at a rate of 0.8 ppm to the finished water. A residual of 0.4 to 0.5 ppm throughout the distribution system inhibits lead and copper release.

Tenmile Disinfection

Disinfection is accomplished by the addition of chlorine gas at the TTP, as is currently practiced at the MRTP. Water is chlorinated at a dose of 1.0 mg/L as it enters the clearwell, and then again to 1.0 to 1.2 mg/L as it enters the distribution system. The existing system is outdated and there are a number of safety issues, including:

- System is not in compliance with current safety and fire codes;
- Ventilation system needed; and
- Eemergency gas scrubber or approved containment vessel needed.

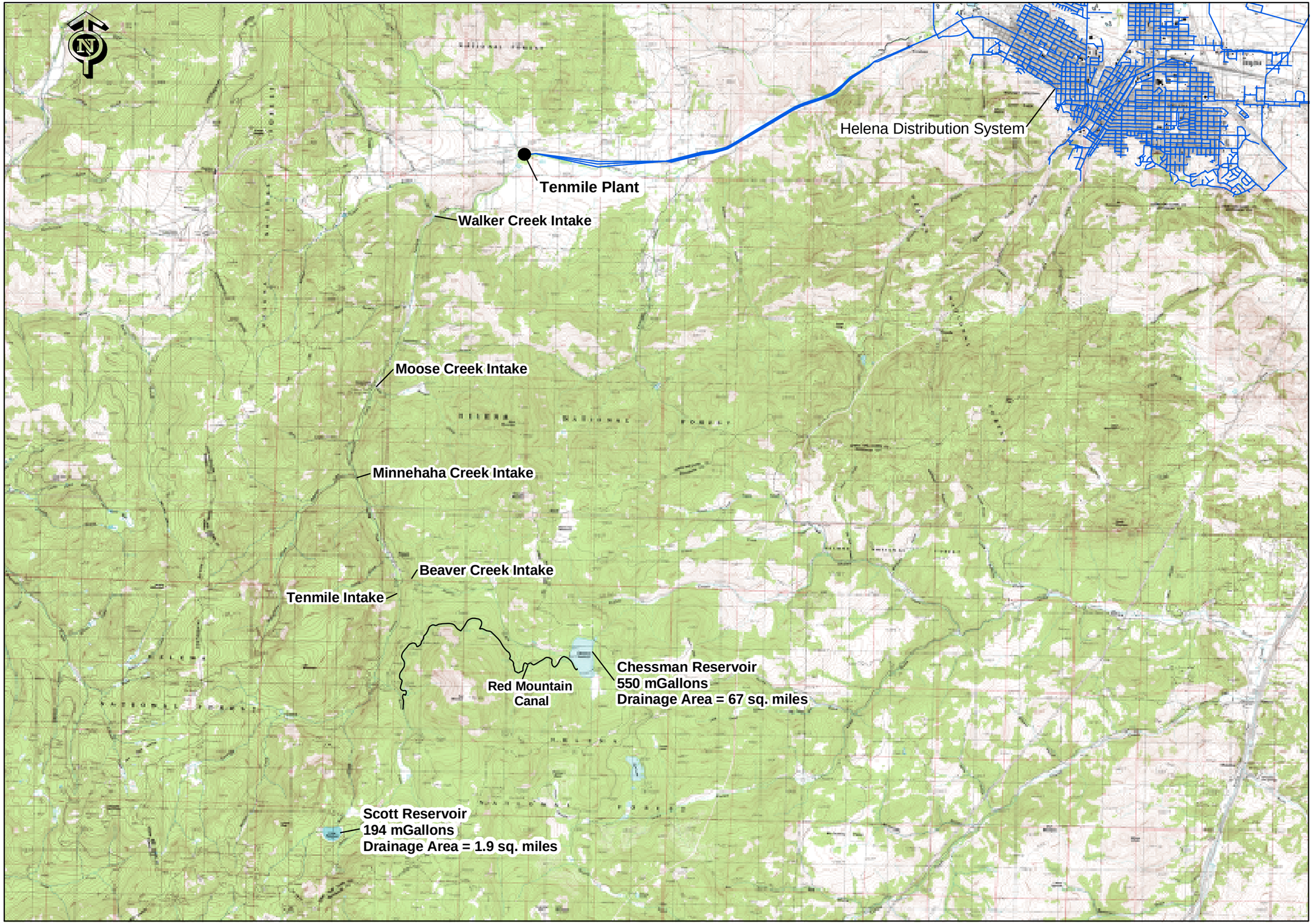

HELENA MONTANA
QUEEN CITY OF THE ROCKIES
ONE COMPANY | Many Solutions HDR

City of Helena
Water Facilities Plan

Figure 3-6
Tenmile Raw Water System

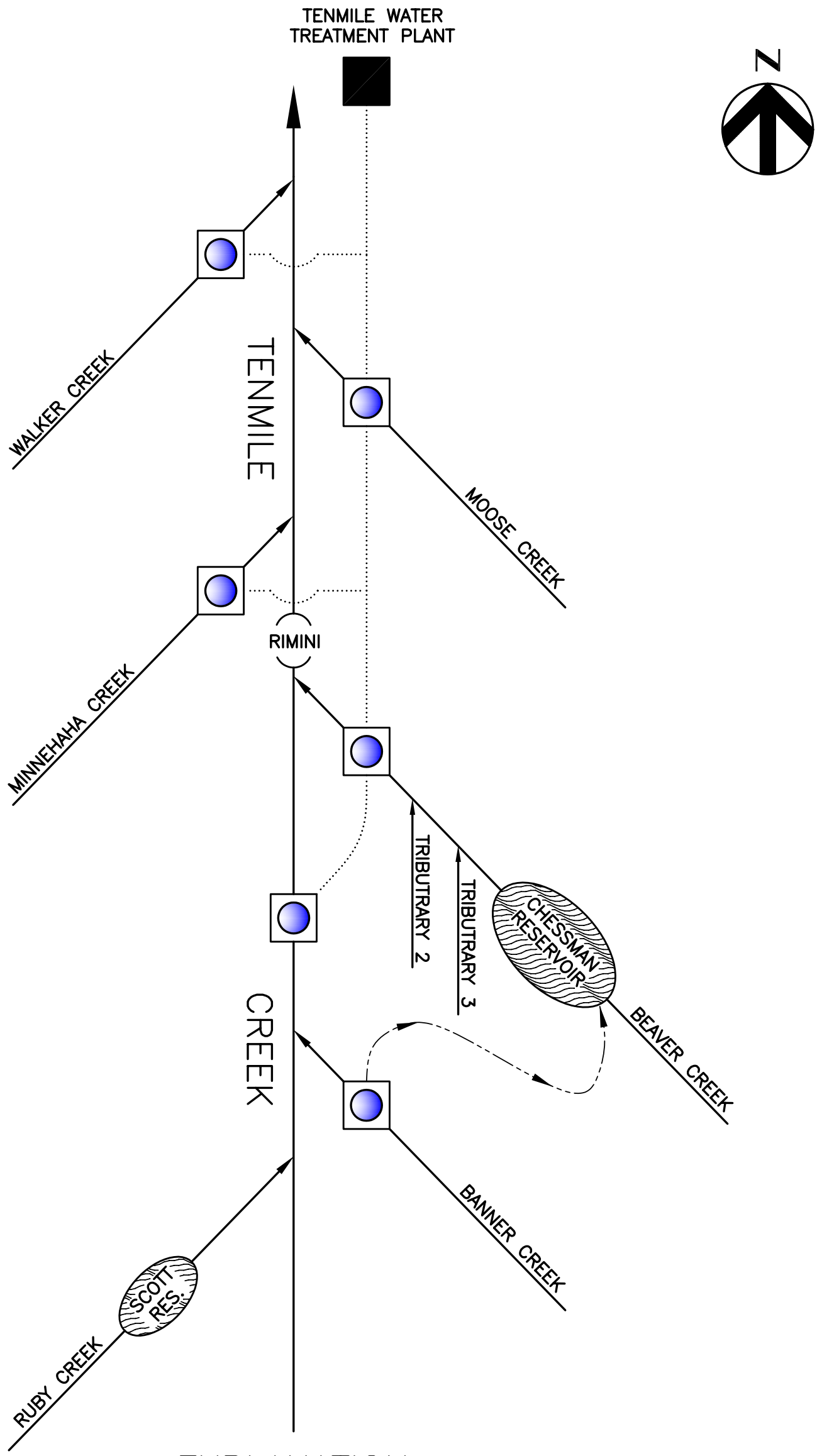

EXPLANATION

DIVERSION FOR TENMILE WATER

BURIED PIPE CONVEYING DIVERTED FLOW TO TREATMENT PLANT

FLUME FROM BANNER CREEK TO CHESSMAN RESERVOIR

Figure 3–7
Tenmile Raw Water System
Schematic

City of Helena
Water Facilities Plan

HELENA MONTANA
QUEEN CITY OF THE ROCKIES

ONE COMPANY | Many Solutions HDR

Tenmile Treatment Facility

The TTP was designed for 9 MGD capacity and was constructed in 1990. No substantive improvements have been made to the plant since that time. The plant consists of an overflow/screen box, contact adsorption clarifiers and gravity mixed media filtration. Finished water flows by gravity to the clearwell. A schematic view of the treatment process is shown in Figure 3-8 and the hydraulic profile is shown in Figure 3-9.

The Tenmile WTP (constructed in 1990) operates successfully, but faces water supply risks.

The filter media was evaluated in 2004. The media gradation has changed significantly from when it was installed. Finer media is located at the filter surface, reducing filter run times. The media needs to be replaced to provide more reliable filtration. A detailed design criteria table is included in Appendix 3-B.

Tenmile Finished Water Storage and Transmission

The TTP has a 4 million gallon (MG) clearwell. The estimated high water elevation of the clearwell is 4424.5. The clearwell is hydraulically connected through a 30-inch line to the wet well for the backwash, surface wash and plant water pumps. The minimum water surface elevation in the wet well for pump operation is 4417.0, leaving a 7.5 foot operating band. Only approximately 70% of the available clearwell volume can currently be used.

The TTP clearwell discharges through approximately 6 miles of 16-inch to 36-inch diameter water line. Theses lines were constructed in the 1990's and have not been inspected. A flow control valve and pressure relief valves are located along the route. The maximum flow capacity of the treated water gravity transmission pipelines from the TTP to the City of Helena is approximately 8 MGD.

Tenmile Wells 1 and 2

There are two wells at the TTP. The wells provide a capacity total of 1050 gpm capacity. These wells are used to supplement the plant water system and can provide a limited amount of finished water capacity in case of an emergency. They have also been used in the past to dilute the raw water during high turbidity events to maintain treatability.

Samples for the Tenmile wells were taken in 2004 and sampled for Radon-222. The results are shown in Table 3-1. These values exceed the 300 pCi/L MCL in the proposed Radon Rule.

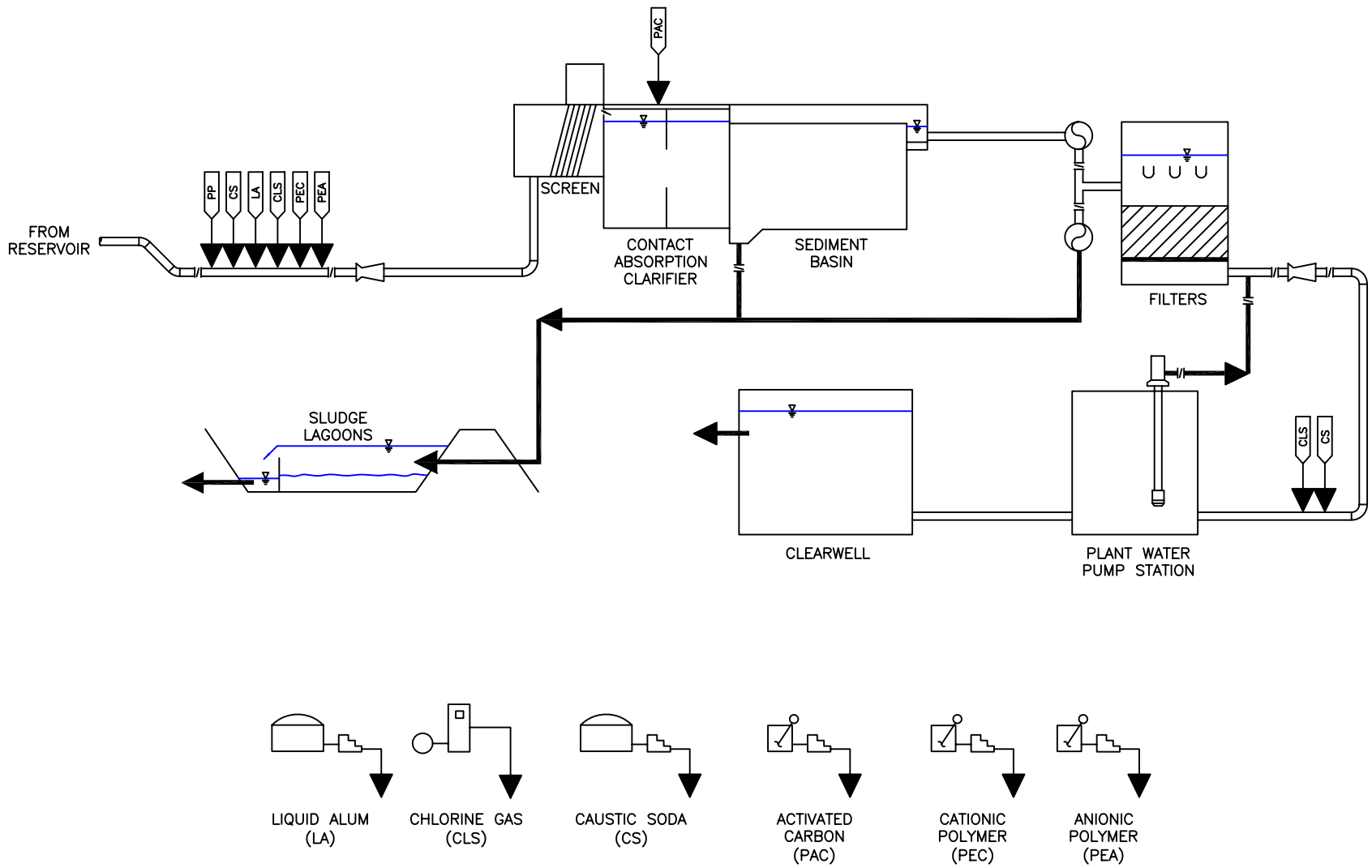

Figure 3–8
Tenmile Water Treatment Plant
Existing Treatment Process

City of Helena
Water Facilities Plan

HELENA MONTANA
QUEEN CITY OF THE ROCKIES

HDR
ONE COMPANY | Many Solutions

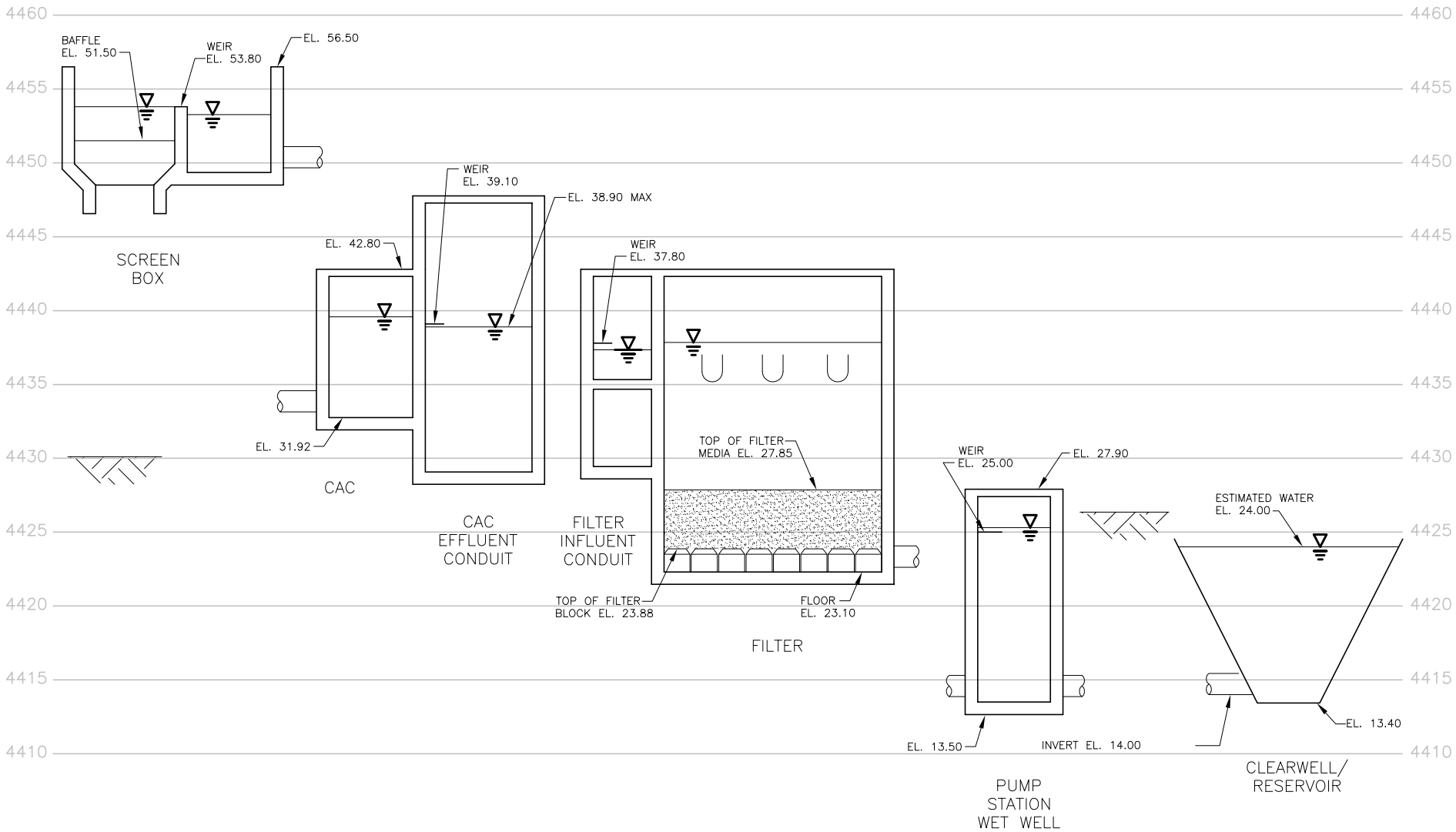

NOTE:

THIS PROFILE WAS DRAWN BASED ON ELEVATIONS PROVIDED IN THE 1987 DESIGN DRAWINGS.

Figure 3–9
TTP Hydraulic Profile

City of Helena
Water Facilities Plan

HELENA MONTANA
QUEEN CITY OF THE ROCKIES

HDR
ONE COMPANY | Many Solutions

Table 3-1 Raw Water Quality Summary - Tenmile Wells #1 and #2

Parameter	Units	Average
Radon 222 – Tenmile Well #1[1]	pCi/L	1230
Radon 222 – Tenmile Well #2[2]	pCi/L	3210

[1] One sample taken September 2004. Precision (+-) 71.5 pCi/L.
[2] One sample taken September 2004. Precision (+-) 91.3 pCi/L.

Hale Supply

The Hale Supply consists of two sources: Orofino and Eureka. The Orofino collector system obtains its water from a spring and shallow groundwater supplies captured by an infiltration system. The Eureka collector and well sump lifts shallow groundwater captured from a historic mine shaft.

Hale Water Right

The City's water right to Orofino dates back to 1866 and 1867, when 1.2 cfs (0.78 MGD) and 2.5 cfs (1.6 MGD) were certified. An additional 1 cfs (0.65 MGD) water right was secured in 1912 for Orofino. The City secured a 500 gpm (0.72 MGD) water right to Eureka in 1933.

MDEQ has listed the Orofino source as under the influence of surface water.

Hale Delivery Capacity

Orofino

The construction of the Orofino source is unknown. A 1948 report indicates that there are multiple springs or subsurface drains that flow through a concrete circular structure into a 10-inch pipe that runs to the Hale Reservoir. The structure is located in a swampy area near Cox Lane. Surface water could be infiltrating into the structure. The location of the springs and drains that serve the area is unknown.

In addition, at some point a spring box was constructed that may or may not connect to the line from the circular structure. The spring box is a rock and concrete box with water entering from the bottom of the box that then exits via a 10- to 12-inch cast iron pipe. The spring box is in disrepair.

The City has replaced the roof and overflow. The source of water to the box is unknown. In the 1980s and 1990s, exposed sections of the 10-inch pipeline to Hale were replaced and improved. A flow meter was added to continuously monitor and totalize flow.

In April of 2003, MDEQ inspected the inlet to Orofino. The report is included in Appendix 3-C.

The Orofino system has an estimated capacity of 200 gpm (0.3 MGD) and typically supplies 112 MG/yr of water to the City.

Eureka Well and Pump Station

The Eureka Well consists of a concrete lined shaft approximately 50 feet deep that has at least three laterals of unknown length providing water to a 8-foot by 10-foot by 13-foot deep sump. The water surface is 34 feet, 9 inches below the top slab. Two of the laterals are 6-inch diameter; one is 18-inch diameter. The three laterals come into the sump about 39 feet, 6 inches below the well station top slab. Like the Orofino supply, the source is essentially unknown.

The system connects to the Hale Zone through an 8-inch line. It also discharges to the Upper Malben Woolston distribution system directly via an 8-inch line. Improvements were made to the Eureka well supply, including new pumps, telemetry and automated chlorination.

The Eureka system has a firm capacity of 380 gpm (0.55 MGD) and typically provides 208 MG/year of water to the City.

Groundwater

In 1992, the City of Helena was granted a municipal water rights reservation, which expires in 2035. This reserves groundwater rights for the deeper of two aquifers that lie below Helena Valley. This water right is documented in Appendix 3-D. The 1997 Master Plan Update suggested there is sufficient groundwater supply from which the City of Helena may draw. Based on these recommendations, in 1998 the City conducted groundwater exploration.

The summary report from the 1998 groundwater exploration, "Municipal Water Wells TH1 and PW1 City of Helena Groundwater Exploration Program Helena, Montana," found that the well production from the test wells was much less than had been predicted in prior reports. There were two wells drilled and tested. The first well was 740 feet deep, drawing from the deeper aquifer. This well had a drawdown of 420 feet and produced an average pumping rate of 420 gpm. The second well was 630 feet deep, drawing from the upper aquifer. This well was pumped at an average rate of 300 gpm at a drawdown of 250 feet. Samples taken from both wells showed levels of iron and manganese that were acceptable.

Based on the completed test, the pumping capacity of the wells was much lower than what is necessary for a municipal water supply. In order to meet the required demand, 16 wells of similar size would be necessary. In addition, private well supplies could be compromised if long term withdrawal from the aquifers were to take place.

There are additional issues that could arise with the blending of groundwater and surface water. Depending on the groundwater characteristics, it may be necessary to adjust the pH and/or alkalinity of the groundwater to prevent corrosion issues in the distribution system. It may also be necessary to treat the groundwater for constituents such as arsenic and radon, depending which could add substantial cost.

For the present, the City has chosen to pursue additional surface water supplies to meet growing demand. To that end, a 40-year contract renewal with the US Bureau of Reclamation has been negotiated that can provide as much as 11,300 acre-feet of water annually from Canyon Ferry Reservoir. The delivery system for this water is already in place via the Helena Valley Regulating Reservoir, canal system and pipeline to the

Missouri River water treatment plant. A copy of the agreement between the City and USBOR can be found in Appendix 3-E.

Distribution System Description

Introduction

To serve a growing community in an acceptable manner, water must be reliably conveyed to customers. The City of Helena is served by a water distribution system consisting of reservoir pumping stations, and distribution mains. Major distribution system components are shown in Figure 3-1. The distribution system currently serves most of the core urban area. However, some densely populated locales on the west and north sides of the city do not have City water service and utilize wells.

The objective of this section is to describe existing distribution facilities, identify deficiencies that may require correction, and define desirable and undesirable characteristics that should be considered in the design of future facilities

Existing deficiencies are particularly important. Deficiencies include limitations that:

- Complicate operations of the water distribution system;
- Compromise reliability;
- Lead to future capacity loss if not corrected; and
- Compromise fire flow availability.

Water System Model

To evaluate the capacity of the existing water system and to establish a tool for planning future expansion, a hydraulic model of the distribution systems' network was prepared. To develop the model, it was necessary to identify the magnitude of the water demands, including demands from residential, commercial, and industrial activities. These demands are summarized in Chapter 5.

The program WaterCad™, developed by Haestad Methods, was used for this purpose. WaterCad™ is a commercially available program that uses an integrated visual display to present system information and to report hydraulic capacity.

To create the model, three sources were used:

- City/County GIS data.
- As-built drawings of newly constructed facilities.
- Billing data by parcel.

A new model was created, rather than updating the City's old model, because the City/County GIS data included a more complete data set that could be imported into the model. A detailed discussion on model setup and calibration is included in Appendix 3-F.

Nob Hill Reservoir is the newest reservoir in the system.

Reservoirs

There are eight water storage reservoirs within the City of Helena water distribution system: Nob Hill, Woolston Reservoir No. 1, Woolston Reservoir No. 2, Malben Reservoir, Winne Reservoir No. 1, Winne Reservoir No. 2, Hale Reservoir, and the Upper Hale Reservoir. These reservoirs provide the following storage functions:

- Operational storage to meet peak hour water demands within the distribution system.
- Emergency storage to satisfy short term, emergency supply.
- Storage for fire protection as required by the Insurance Services Office (ISO) and the City of Helena.

Inspections of Malben, Hale, and Woolston Reservoirs and treatment clearwells were completed in 2005.

Operational Storage

Typically, water treatment and supply facilities are designed to meet maximum day demands within the system. The purpose for storage reservoirs within the system is to provide a volume of water to satisfy peak hour or instantaneous demands in excess of the delivery capacity from the treatment facilities. The water level and volume of water stored within a reservoir will fluctuate throughout the day. During high demand periods (peak hour), the water level will drop as water flows from the reservoir into the system to meet instantaneous peak demands. During low flow conditions, such as nighttime hours, the reservoirs are filled in preparation for the diurnal flow conditions of the next day.

Emergency Storage

In general, the recommended storage volume within a water system should be sufficient to satisfy water demands of 50 percent of a peak day.

Fire Storage

A portion of the water storage volume throughout the system is sized to provide fire flow for the City. Volume requirements as established for residential fire flow are 1,000 to 1,750 gpm, depending on square footage, for a period of two hours. This equates to 120,000 to 210,000 gallons of storage required for fire flow usages. Another requirement established by ISO and the City is for commercial buildings. This volume is required to handle a fire flow up to 3,750 gpm for a duration of three hours. This equates to 670,000 gallons which must be available for a commercial fire within the City. All of these flows are over and above the normal water demands experienced in the City as satisfied by the water treatment and other supply sources.

Woolston No. 2 has stagnant water in the winter.

Table 3-2 contains a listing of each of the water storage reservoirs, type of construction, volume of each reservoir, and the normal usable (effective) capacity of the reservoir.

Table 3-2 Distribution Storage Reservoir Capacities City of Helens System

Reservoir	Type	Volume [1] (MG)	Effective Capacity [2] (MG)
Nob Hill	Concrete	4.0	4.0
Woolston No. 1	Masonry	3.1	0 [3]
Woolston No. 2	Concrete	3.0	0 [4]
Malben	Steel	4.0	2.7
Hale	Masonry	2.2	2.2
Upper Hale	Concrete	0.2	0.2
Winne No. 1	Steel	0.5	0.5
Winne No. 2	Steel	0.5	0.5
Total		**17.6**	**10.1**

[1] Physical storage volume of reservoir. Although not part of the distribution system, the 4 MG clearwell at the TTP is also available to support emergency supply to the City.
[2] Reservoir volume that is usable during normal water demand.
[3] Woolston No. 1 is currently out of service due to leakage problems.
[4] Woolston reservoir levels do not fluctuate except during extremely high demand events or low TTP flows.

However, a significant portion of the existing reservoir capacity is not utilized during normal distribution system operations. For example, water levels in either the Woolston No. 1 or No. 2 Reservoirs do not fluctuate significantly throughout the day under normal demand conditions and normal supply for TTP. The elevations of these two tanks are such that pressurized flow from the Tenmile supply pipeline typically is too high to permit flow in and out of the Woolston Reservoirs. As such, the long storage times create taste and odor problems in the Woolston Reservoirs. During unique high flow conditions, such as heavy irrigation demands in the early spring, water drawn from these reservoirs results in the taste and odor problems within the southwestern portion of the City. Under fire flow conditions, however, water stored in the Woolston Reservoirs would be available for fire protection.

Of the 17.6 MG storage in the distribution systems, only 10.1 MG is available.

The complete volume of the Malben Reservoir is not always usable. If the water level in the Malben tank drops to below 8 feet of depth, the Dalhausen Pump Station, which takes suction from this reservoir, experiences significant suction head problems and causes the pumps to lose flow and cavitate. As a result, operations personnel try to maintain the Malben Reservoir tank level above the 8-foot depth. Consequently, the volume below 8 feet is not available for pumping into the Winne Zone or for other usages.

The total effective and usable capacity from the eight reservoirs amounts to approximately 10 million gallons. The remaining volume is not available for normal operating use.

The information below provides a brief discussion and overview for each of the eight reservoirs which serve the City of Helena water distribution system.

Nob Hill Reservoir

Nob Hill Reservoir is an at-grade 4 MG prestressed concrete tank. It was constructed in 2000 and is the newest reservoir in the system. The reservoir is in good condition and provides gravity supply to the Malben Zone and pumped supply to the Winnie Zone, via the Nob Hill Pump Station. A 16-inch reservoir overflow line discharges to a natural drainage course.

Woolston Reservoirs

Woolston Reservoir No. 1 is a partially buried, rectangular shaped masonry structure. In the 1960s, a roof was constructed over the reservoir and the volume was reportedly increased from 2.1 to 3.1 MG. It is presumed that the increased volume was accomplished by raising the overflow elevation. The reservoir has been lined with a cementateous coating, but due to excessive leakage, Woolston No. 1 has been out of service for several years. Water leakage from the reservoir surfaced as a small spring discharging down hill from the reservoir. The rate of flow from the leakage was measured at approximately 60,000 gallons per day. It is presumed that the observed water leakage is from a piping connection located beneath the reservoir.

Woolston Reservoir No. 2 is a partially buried, cylindrical reservoir with a reported capacity of 3.1 MG. This reservoir was re-roofed in late 1977. Water from the Tenmile supply pipeline flows into the Woolston reservoirs by gravity. An altitude valve at the inlet terminates flow to the reservoir when full. As described above, stagnant water and quality degradation occur in the reservoir during the winter months or low flow conditions.

Malben Reservoir

This reservoir is a ground level, steel tank with a capacity of 4 MG. The Malben Reservoir was constructed during the late 1950s. The roof support system and steel sidewalls at the ice line are reportedly in very poor condition. A structural inspection of the steel tank was completed in 1988, which identified significant pitting and corrosion throughout the tank. During an inspection of the floor, some cracking in the lap joint welds and the shell-to-floor welds was observed. The inspection recommended welding, repair, and repainting of the steel tank. Unfortunately, due to the critical function which the Malben Reservoir performs in maintaining pressures and storage capacities within the system, it is difficult to take the reservoir out of service for the needed maintenance, repairs, and painting.

Malben Reservoir is the backbone of the distribution system.

The City recently completed construction of a new 36-inch supply line to the Malben Reservoir from the crosstown connector and the Missouri River supply line. With this connection, the Malben tank is the backbone of the water distribution and storage system.

Winne Reservoirs

The two Winne Reservoirs are each ground level, steel tanks with a combined capacity of 1 MG. Winne No. 1 was constructed in 1972. City personnel conducted an internal inspection of the tank in 1995 and the tank was reported to be in satisfactory condition. Winne No. 2 was constructed in 1985, doubling the storage capacity in the Winne Zone at that time. The interiors of both tanks were recoated in 2001.

Winne reservoirs were recoated in 2001.

Hale Reservoir

The Hale Reservoir is a partially buried, rectangular shaped masonry structure with approximately 16 feet of water depth. In the late 1970s, a roof was constructed over the reservoir. Previously, this reservoir was open to the atmosphere, which posed a water quality concern. The volume of the Hale Reservoir is 2.2 MG. Upon inspection, it was noted that the overflow pipe is no longer functional.

In the 1970s, a roof was added to Hale Reservoir.

The Hale Zone and reservoir are isolated from the rest of the distribution system. However, excess water from the Hale Zone can flow back into the Upper Malben-Woolston Zone through a small diameter pipeline and manually operated valve located at the intersection of Miller and Warren. At certain times and during high use periods, City personnel will manually open this valve to allow excess water from the Eureka well to flow through the Hale Reservoir and supplement supply to the lower zones. However, since this valve is manual, it is difficult to control and the Hale Reservoir level must be continuously monitored and the value adjusted so that the reservoir will not overflow or drain empty.

A fence has been build around the reservoir to increase security.

Upper Hale Reservoir

The Upper Hale Reservoir is a partially buried concrete tank with a volume of 200,000 gallons. The tank construction was completed in 1994 and is in good condition. The reservoir provides treated water storage and fire flow protection for residents in the Upper Hale Zone.

Pump Stations

Seven different pumping stations are located within the City of Helena water distribution system. Two of these pumping stations are located at the MRTP and pump water into the Lower and Upper Malben-Woolston Zones. The remaining pump stations function to transfer stored water from a lower zone into a higher-pressure zone within the system.

Design characteristics of the existing stations are listed in Table 3-3. Only the Reeder's Village station has emergency power generation.

Table 3-3 Existing Design Capacities of Distribution Pumping Stations

Description	Units	Criteria
Lower Malben-Woolston Zone		
Number Pumps	no.	3
Capacities	gpm	1,040, 2080, 2080
Size	hp	125, 300, 300
Firm Capacity [1]	gpm	3,000
Upper Malben-Woolston Zone		
Number of pumps	no.	3
Capacity, each	gpm	2080
Size, each	hp	400
Firm Capacity[1]	gpm	4,000
Drives	Constant	2
	VFD	1
Dalhausen Pump Station		
Number of pumps	no.	3
Capacity	gpm	700, 700, 1100
Size	hp	60, 60, 75
Firm Capacity [1]	gpm	1400
Eureka Pump Station		
Number of Pumps	no.	2
Capacity, each	gpm	400
Size, each	hp	60
Firm Capacity	gpm	400
Upper Hale Pump Station		
Number of pumps	no.	2
Capacity, each	gpm	80
Size, each	hp	10
Firm Capacity [1]	gpm	80
Nob Hill Pump Station		
Number of pumps	no.	2
Capacity, each	gpm	900

Description	Units	Criteria
Size	hp	50
Firm Capacity	gpm	900
Reeder's Village Pump Station		
Number of pumps	no.	3
Capacity, each	gpm	75, 150, 1750
Size	hp	5, 10, 75
Firm Capacity	gpm	225
Forrest Estates		
Number of Pumps	no.	3
Capacity each	gpm.	30, 500, 500
Size	hp	3, 25, 25
Firm Capacity	gpm	530

[1] Capacity with largest pump out of service.

Nob Hill Pumping Station

This station was constructed in 2000 in conjunction with the reservoir. Two centrifugal pumps, each 900 gpm capacity, discharge to a 14-inch line to the west (toward Winne) and an 8-inch line to the east (to serve new East Side development). A liquid chlorine system feeds chlorine based on flow, as needed. Pump control is performed either at the local control panel or from the Tenmile WTP.

Nob Hill pump station is the newest station in the distribution system.

Eureka pump station is in good condition.

Eureka Pumping Station

This facility is a deep sump that collects water from several underground infiltration galleries. This station was reconstructed with a new building and pump rehabilitation in 1994. The Eureka well is equipped with two 60-hp vertical turbine pumps. Normally, only one pump is operated at a time. The water is pumped directly into the distribution system and to Hale Reservoir. Pump control is all performed manually from a local panel. The pump discharge rate must be throttled to prevent well drawdown and pump shutoff.

Upper Hale Pump Station

This station was constructed in 1994 to supply water to the Upper Hale Zone and reservoir. The station is equipped with two 10-hp centrifugal pumps. The pumping rate is 80 gpm. The Upper Hale pumping station is connected into the water system telemetry and can be controlled from the TTP. The station also houses a chlorination system to re-chlorinate water as it is pumped into the Upper Hale Zone. This chlorination facility also provides primary disinfection for the Orofino supply as it enters the Hale Reservoir. The pump station is located adjacent to and at the foot of the hill at the existing Hale Reservoir.

Upper Hale pump station is in good condition.

Dalhausen Pump Station

The Dalhausen Pump Station is located adjacent to the existing Malben Storage Tank. This station supplies water to the Winne Zone. The Dalhausen Pump Station is equipped with three split-case centrifugal pumps. Pumps No. 1 and No. 2 are each 60 hp pumps with a reported individual capacity of 550 to 700 gpm. The pumps would have a combined capacity of 1,250 gpm, but the discharge line is undersized and it is not possible to run both pumps simultaneously. Pump No. 3 is a 70 hp pump with a capacity of 840 to 1,120 gpm. Due to suction head considerations, the pumps cannot operate when the water depth in the Malben Reservoir is below 8 feet. In addition, Pump No. 1 has a recurring history of air binding that has not been corrected.

The existing Dalhausen Pump Station does not have sufficient capacity to supply peak water demands currently experienced in the Winne Zone. However, with the addition of the Nob Hill Pump Station, the two pump stations can meet peak demand.

Forrest Estates Pump station may be rehabilitated to provide fire flows.

Forrest Estates Pump Station

This pumping station supplies water to a small subdivision located above La Grande Canyon Boulevard. There is no storage within this system. Water pressure is maintained by operation of a 5 hp centrifugal Goulds pump. There are also two 25 hp pumps at this station to provide fire flows. However, it is difficult to maintain working order of these high flow capacity pumps due to infrequent use. This pump station is planned to be upgraded to provide both fire flows and residential demand flows. The upgrade may include a companion reservoir at a suitable elevation for the fire storage and pump operating storage.

Reeder's Village

The City constructed the Reeder's Village Pumping Station to supply water to supply the Reeder's Village development. This pumping station pumps water from the Upper

Malben-Woolston Zone into the subdivision distribution piping. The pump station includes two pumps to meet residential demands: one 50 gpm and one 75 gpm. In addition, one 1,750-gpm-fire flow pump is provided.

Pressure Reducing Valves (PRVs)

There are a total of six pressure reducing valves separating the Upper and Lower Malben-Woolston Zones. In addition, there are two PRVs located on the MRTP transmission pipeline which supplies water to the Helena Airport complex and the new National Guard complex. All of the existing valves are operational but require frequent maintenance and adjustment.

Piping

The City of Helena water distribution system consists of miles of pipeline ranging in size from small diameter service connections to 36-inch supply mains. The majority of the water supply mains are ductile iron pipe. Other pipe materials consist of cast iron, galvanized iron, ductile iron, steel, copper, and polyvinyl chloride (PVC). The greatest improvement to the water distribution system has been a focused plan for replacing old and deteriorating piping. In the past 20 years, the City has replaced several miles of distribution piping, which has greatly reduced leakage within the system and improved delivery of water throughout the City. The City currently spends several hundred thousand dollars annually for pipeline replacement.

Appendix 3-A Existing Design Criteria - Missouri River Water Treatment Plant

Description	Units	Plant Values	MDEQ Requirements
MRTP			
Plant Flow Rate	MGD	12	
	gpm	8,340	
Flash Mix			
Type: Pump-Injection			
Number	no.	1	2 minimum
Mixing Energy, G	sec^{-1}	1,000	--
Pump Capacity	gpm	100	--
Size	hp	3	--
Flocculation Basins			
Type: Rectangular, Vertical, Shaft, Mechanical, Two-Stage			
Number Basins	no.	2	2 minimum
Stages Per Basin	no.	2	
Dimensions, Each Stage	ft x ft	24.5 x 24.5	
Water Depth	ft	14	
Volume, Each Stage	ft^3	8,400	
Total Volume	ft^3	33,600	
Detention Time	min.	30	at least 30 min.
Floc Mixers Per Basin	no.	2	
Total Floc Mixers	no.	4	
Motor Size (Two-Speed)			
1st Stage	hp	3, 1.3	
2nd Stage	hp	1, 0.44	
Energy Input (G)			
1st Stage	sec^{-1}	60, 30	
2nd Stage	sec^{-1}	30, 15	
Sedimentation Basins			
Type: Rectangular, Tube Settlers w/ chain & Flight Sludge			
Number	no.	3	

Description	Units	Plant Values	MDEQ Requirements
Dimensions (L x W)			
Basins No. 1, No. 2	ft x ft	69 x 25	
Basin No. 3	ft x ft	105 x 24	
Water Depth			
Basins No. 1, No. 2	ft	11.5	
Basin No. 3	ft	14	
Volume, Each			
Basins, No. 1, No. 2	ft^3	19,800	
Basin No. 3	ft^3	35,000	
Total Volume	ft^3	74,600	
Flow Distribution, Each			
Basins No. 1, No. 2	MGD	3, each	
Basin No. 3	MGD	6	
Surface Loading Rate			
Basins No. 1, No. 2	gpm/ ft^2	2	2
Basin No. 3	gpm/ ft^2	2.5	2
Detention Time			
Basins No. 1, No. 2	min.	71	>240
Basin No. 3	min.	62	>240
Horizontal Velocity			
Basins No. 1, No. 2	fpm	1.0	<0.5
Basin No. 3	fpm	1.66	<0.5
Weir Loading			
Basins No. 1, No. 2	gpd/ft	15,000	20,000
Basin No. 3	gpd/ft	20,000	20,000
<u>Filters</u>			
Type: Gravity, Mixed Media, Rate-Flow Controlled, Pumped Backwash, Air Scour, Leopold gravelless underdrains, Filter to Waste			
Number	no.	8	at least 2
Dimension (L x W)	ft x ft	18 x 15	

Description	Units	Plant Values	MDEQ Requirements
Area, Each	ft^2	270	
Total Surface Area	ft^2	2,160	
Filtration Rate	gpm/ ft^2	3.9	
Maximum Rate (One in Backwash)	gpm/ ft^2	4.4	
Filter Media			
Anthracite Coal			
Depth	in	28.5	
Effective Size	mm	0.95 - 1.05	0.8 to 1.2
Uniformity Coefficient	--	1.4	<1.85
Silica Sand			
Depth	in	12	
Effective Size	mm	0.45 – 0.55	0.45 to 0.55
Uniformity Coefficient	--	1.40	<1.65
Total Depth	in	40.5	at least 24"
Total L/d Ratio	--	1,195	
Backwash Rate	gpm/ ft^2	14.5	15 to 20
Air Scour Rate	cfm/ft^2	4.0	
Backwash Pumps	no.	1	
Capacity	gpm	4,700	
Size	hp	100	
Backwash (Volume Estimate)			
Backwash (10 min)	gal	40,000	
Total	gal	42,430	
Unit Backwash Volume (UBWV)	gal/ ft^2	157	
<u>Clearwells</u>			
Type: Rectangular, Buried, Reinforced Concrete			
Number	no.	2	
Water Depth, Max.	ft	6	
Volume, Each	gal	200,000	
Detention Time, Each	min	24	

Description	Units	Plant Values	MDEQ Requirements
Blowers			
Type: Positive displacement			
Number	no.	2	
Capacity, Each	scfm	1,080	
Size, Each	hp	50	
Filter to Waste Pump			
Type: Centrifugal			
Number	no.	2	
Capacity, Each	gpm	810	
Size, Each	hp	5	
High Service Pumping Stations			
Type: Vertical Turbine			
High Zone Pumping Station			
Number of Pumps	no.	3	
Capacity, Each	MGD	3	
Size, Each	hp	400	
Low Zone Pumping Station			
Number of Pumps	no.	3	
Capacity	MGD	1.5, 3, 3	
Size	hp	125, 300, 300	
Sludge Lagoons			
Type: Earthen, Trapezoidal Shaped			
Number	no.	2	
Sludge Production Estimates			
Production Rate	dry lbs/MG	160	
Annual Sludge Production	dry lbs/yr	32,000	

Appendix 3-B Existing Design Criteria - Tenmile Treatment Plant

Description	Units	Plant Values	MDEQ Requirements
TTP			
Plant Flow Rate	MGD	8	
	gpm	5,556	
Contact Adsorption Clarification (CAC)			
Type: Rectangular, Buried, Reinforced Concrete			
Number	no.	4	at least 2
Dimension (L x W)	ft x ft	15x11	
Water Depth, Max.	ft^2	5.5	
Volume, Each	ft^2	6,788	
Detention Time, Each, (One unit out of service)	min.	4	
Filters			
Type: Gravity, Mixed Media, Rate-Flow Controlled, Pumped Backwash, Fixed Grid Surface Wash, Wheeler Underdrain			
Number	no.	4	at least 2
Dimension (L x W)	ft x ft	25x13	
Area, Each	ft^2	325	
Total Surface Area	ft^2	1300	
Filtration Rate	gpm/ ft^2	4.3	
Maximum Rate (One in Backwash)	gpm/ ft^2	5.7	
Filter Medias			
Anthracite Coal			
Depth	in	22	
Effective Size	mm	1-1.1	0.8 to 1.2
Uniformity Coefficient	--	</=1.7	<1.85
Silica Sand			
Depth	in	9.5	
Effective Size	mm	0.45-0.55	0.45 to 0.55
Uniformity Coefficient	--	</=2.2	<1.65

Description	Units	Plant Values	MDEQ Requirements
High Density Sand			
Depth	in	4.5	
Effective Size	mm	0.2-0.32	
Uniformity Coefficient	--	</=2.2	
High Density Support Gravel			
Depth	in	3	
Effective Size	mm	1.14-1.16	
Uniformity Coefficient	--	</=2.2	
Total Support Gravel Depth	in	12	
Total Depth	in	48	at least 24"
Surface Wash Rate	gpm/ ft^2		2
Backwash Rate	gpm/ ft^2	15-17	15 to 20
Backwash Pumps	no.	2	
Capacity	gpm	5,525	
Size	hp	125	
Surface Wash Pumps			
Capacity	gpm	300	
Size	hp	30	
Backwash (Volume Estimate)			
Surface Wash (3 min)	gal	900	
Backwash (10 min)	gal	221,000	
Total	gal	221,900	
<u>Clearwells</u>			
Type: Trapezoidal, Earthen, Lined, Uncovered			
Number	no.	1	
Dimension (L x W)	ft x ft	300x260	
Water Depth, Max.	ft	12	
Volume, Each	gal	6,000,000	
Detention Time, Each	min	1080	

Description	Units	Plant Values	MDEQ Requirements
Sludge Lagoons			
Type: Earthen, Trapezoidal Shaped			
Number	no.	3	
Sludge Production Estimates			
Production Rate	dry lbs/MG	104	
Annual Sludge Production	dry lbs/yr	251,500	

Appendix 3-C Inlet Inspection and Classification of Orofino

Montana Department of
ENVIRONMENTAL QUALITY

Judy Martz, Governor

P.O. Box 200901 • Helena, MT 59620-0901 • (406) 444-2544 • www.deq.state.mt.us

CERTIFIED MAIL

August 20, 2004

John Rundquist, P.E.
City of Helena
City-County Building
316 North Park, Room 421
Helena, MT 59623

Re: Oro Fino Spring and Hale Well
Final GWUDISW Classification
PWSID MT 0000241

Dear John:

This letter is regarding the final classification for the Ground Water Under the Direct Influence of Surface Water program for the Oro Fino and Hale sources for the City of Helena.

In a letter dated May 9, 2003 Doug Hahn of the City of Helena provided construction details for the Eureka Well. Based on the construction details proved by the City this source, **PWSID MT0000241, WL002, has been classified as groundwater.**

The Oro Fino Spring, **PWSID MT 0000241, WL006 is classified as Ground Water the Direct Influence of Surface Water**. This classification is based on the location, unknown construction, and multiple moderate risk MPA samples. It appears that the Oro Fino Spring is part of the water system that was described by C. T. Wright in his 1948 report that was in use at that time and that the system has not been up-graded since.

With this classification the City of Helena has the following options for the Oro Fino Spring that must be met no later than 18 months (March 1, 2006) after receipt of this letter.

1) **Provide filtration treatment to the Spring source water and comply with requirements for filtered systems as specified in the Code of Federal Regulations (CFR) 141.70:**
2) **Meet the criteria to avoid filtration and comply with the requirements as specified in CFR 141.71 (Criteria for Avoiding Filtration);**
3) **Permanently disconnect the Spring source water from the fountain; or**
4) **Seek a new source or re-build the existing source.**

In the interim period disinfection of the source is required under CFR Subpart H, § 141.72 (a) and 17.38.229 ARM. Since this source is already receiving continuous chlorination this requirement has been met. John, as soon as you know what your plans are for this source please let me know how you want to proceed.

If you have any questions about this classification process please do not hesitate to contact me.

Sincerely,

Steven P. Kilbreath, R.S., M.S.
Hydrogeologist
Public Water Supply Section
406 444-4630
E-mail: skilbreath@state.mt.us

Cc: File
Ryan Leland, P.E., City of Helena
John Schwartz, City of Helena
Lewis and Clark County Sanitarian

E-mail:
Jon Dilliard, Public Water and Subdivisions Bureau Chief
John Camden, PWSS

ROUTE TO: PWS Files

COPY TO:

x FIELD

PHONE

OFFICE

MONTANA DEPARTMENT OF ENVIRONMENTAL QUALITY

PUBLIC WATER SUPPLY SECTION

INDIVIDUAL ACTIVITY REPORT

REPORT BY: Steve Kilbreath DATE: 4/21/03 TIME:

PERSON CONTACTED: Jack Williams – City of Helena PWSID MT0000241

PHONE NUMBER: 406 447-1520

ADDRESS:

SUBJECT: Oro Fino – Hale Spring

SUMMARY OF ACTIVITY: I visited the Oro Fino source with Jack Williams from the City of Helena on 4/15/03 and again on 4/16/03 with Gino Pizzini. While visiting the site with Jack Williams I wandered up the drainage to the south and found the main (?) spring box for the source. This is a rock and concrete box with water entering from the bottom of the box that in turn exits via a 10-12" cast iron pipe and ends up in the clear well adjacent to the road. The spring box is in total dis-repair, the corrugated metal roof is falling into the box and the overflow is almost plugged with debris and moss. See attached photos. The piping from the spring box to the clear well may be compromised where it crosses a swampy area, there is a power pole that has been put in place that may have hit the water main. From there water flows via gravity to Hale Reservoir and is chlorinated prior to entering the reservoir. This source needs a lot of work!

The City of Helena is cleaning up the site, constructing a tight fitting sealed cover and re-building the over flow.

This source needs to be cleaned up completely and then re-tested using MPA's to see if there is any change in the water quality. Past MPA's have all returned moderate risk for surface water and if the source still eturns moderate risk scores we need to classify the source as GWUDISW and treat it as surface water.

Appendix 3-D Missouri River Groundwater Reservation

Water Resources

Commissioners
Kay McKenna, Mayor
Margaret Crennen
Tom Huddleston
Colleen McCarthy
Mike Murray

William J. Verwolf
City Manager

GUARDIAN OF THE GULCH

City of Helena

RECEIVED
JUL 25 2005
HDR ENGINEERING, INC

City-County
Administration Building
316 North Park
Helena, MT 59623

Phone: 406/447-8000

July 27, 1992

RECEIVED
JUL 29 1992
CITY OF HELENA
PUBLIC WORKS

William J. Verwolf
City Manager
City-County Building
316 North Park Avenue
Helena, MT 59601

RE: Missouri River Water Reservation

Dear Bill:

I've received a copy of the Final Order of the Board of Natural Resources and Conservation establishing water reservations aboe Fort Peck Dam. The Order is effective July 1, 1992. It would appear that the City of Helena was successful in obtaining its water reservation. Enclosed for your reference are copies of the Findings of Fact, Conclusions of Law and Order, and the conditions applicable to the City of Helena. I do have the entire Final Order at the office (it's about an inch thick) if you wish to review it as it pertains to other agencies', cities' and counties'water reservations.

If you have any questions about this please let me know.

Very truly yours,

DAVID N. HULL
City Attorney
DNH/ks
Enclosures
c: Richard Nisbet
Max Botz, Hydrometrics

S
Will need this for 8-14 meeting

II. FINDINGS OF FACT

A. FINDINGS ON THE QUALIFICATION OF THE CITY OF HELENA TO RESERVE WATER (Mont. Code Ann. § 85-2-316(1)(1991); ARM 36.16.107B(1)(a).)

1. The City of Helena is an incorporated municipality and a subdivision of the State of Montana. (Bd. Exh. 15-A, p. 1; Mont. Code Ann. § 85-2-316(1), ARM 36.16.107B(1)(a).)

2. The City of Helena has applied for a water reservation of 7,071 acre-feet/year (af/yr) of water with a maximum diversion rate of 16.4 cubic feet/second (cfs) to be diverted from a deep alluvial groundwater aquifer using a well field located near Prickly Pear Creek for year round use. (Bd. Exh. 15-C, p. 1-2.)

3. The City of Helena requested a water reservation to meet future demands by municipal and industrial users and to protect the quality of its municipal water supply. (Bd. Exh. 15-C, p. 1.)

B. FINDINGS ON THE PURPOSE OF THE WATER RESERVATION APPLIED FOR BY THE CITY OF HELENA (Mont. Code Ann. § 85-2-316(4)(a)(1991); ARM 36.16.107B(1)(b).)

4. The City of Helena seeks to provide municipal water for future growth in a cost-effective manner. Sound planning requires providing users with an adequate water supply. The requested term of the water reservation is to year 2035. (Bd. Exh. 15-A, p. 1-5.)

5. The purpose of the reservation is to provide the water for municipal and industrial uses. (Bd. Exh. 15-C, p. 1.) Municipal and industrial uses are beneficial uses of water in Montana. (Mont. Code Ann. § 85-2-102(2)(a), ARM 36.16.102(3); ARM 36.16.107B(1)(b).)

C. FINDINGS ON THE NEED FOR THE WATER RESERVATION APPLIED FOR BY THE CITY OF HELENA (Mont. Code Ann. § 85-2-316(4)(a)(ii)(1991); ARM 36.16.107B(2).)

6. The Tenmile Water Supply, Missouri River Water Supply, Eureka Station and Hale system presently provides an average of 9.27 cfs of high quality water to the City of Helena. (Bd. Exh. 15-A, p. 3-10, and Bd. Exh. 15-C, p. 3.) Because of possible water quality problems (Bd. Exh. 15-C, p. 3), the Missouri River system (5.22 average cfs and 13.9 peak cfs) cannot be considered a firm, long-term, all season water supply (Bd. Exh. 15-C, p. 3, and Bd. Exh. 15-A, p. 3-11.) The reservation water requested

would be delivered from a well field located northeast of the City of Helena's Missouri River Water Treatment Plant drawing from a deep alluvial groundwater aquifer. (Bd. Exh. 15-C, p. 2; Helena Exh. 1, Att. 1-map.)

7. A reservation is the only means to obtain an early priority date for water that will be needed to meet projected ~~municipal and industrial~~ growth and to protect ~~the quality~~ of the city water supply. In the future, water may be appropriated by competing agricultural, industrial, and instream users. (Bd. Exh. 40, p. 249; Bd. Exh. 15-A, p. 2-1.)

8. It is important that the City of Helena have a water reservation to meet future municipal and industrial water demands in order for the community to prosper and develop. (Bd. Exh. 15-A, p. 1-4.)

9. Competing water uses may prevent the City of Helena from obtaining or perfecting a water use permit in the future. Without a reservation, the City of Helena may have to go through a costly process of buying or condemning existing water rights to meet increasing demands. (Bd. Exh. 40, p. 249.)

D. FINDINGS ON THE AMOUNT OF WATER NEEDED FOR THE WATER RESERVATION APPLIED FOR BY THE CITY OF HELENA (Mont. Code Ann. § 85-2-316(4)(a)(iii)(1991); ARM 36.16.107B(3).)

10. The method of determining the amount of water requested for a water reservation by the City of Helena was based on a forecast of its future population to the year 2035 along with the estimated amount of water used per person. (Bd. Exh. 15-C, p. 5.) The methodology used by the City of Helena projected an average annualized (compounded population growth rate) of approximately .50 percent. (Bd. Exh. 40, p. 236.) The 1990 population of Helena was 24,564. (Bd. Exh. 40, p. 236.) The City of Helena's population forecast for the year 2035 is 31,624 people. (Bd. Exh. 40, p. 236.)

11. The methodologies and assumptions used by the City of Helena are suitable and accurate under present conditions. (ARM 36.16.107B(3)(a).) The populations recorded in the 1990 census indicate that Helena grew at an annualized rate of .65 percent between the years 1960 and 1990. Therefore, the city's growth forecast of 31,624 people seems low. (Bd. Exh. 15-C, p. 10.)

12. The City of Helena water system has a low 9 percent rate of leakage (estimated .75 cfs out of 9.27 cfs used daily). (Bd. Exh. 15-A, p. 3-14 to 3-15.)

13. Helena presently meters 99 percent of its water users. (Bd. Exh. 15-C, p. 7.) The City of Helena will continue to require metering. (Bd. Exh. 15-C, p. 7.) Helena water system

users presently consume 228 gallons of water per person daily and the city projects that future use will be 250 gallons per person daily (a typical basin use rate). (Bd. Exh. 15-C, p. 5, and Bd. Exh. 15-A, p. 3-14.)

14. The water use efficiencies associated with the municipal and industrial uses by the City of Helena are reasonable. (ARM 36.16.107B(3)(b).)

15. No other cost-effective measure could be taken within the reservation term to increase the use efficiency by the City of Helena and lessen the amount of water required for the purpose of the reservation. (ARM 36.16.107B(3)(b).)

E. FINDINGS THAT THE WATER RESERVATION APPLIED FOR BY THE CITY OF HELENA IS IN THE PUBLIC INTEREST (Mont. Code Ann. § 85-2-316(4)(a)(iv)(1991); ARM 36.16.107B(4).)

16. Benefits of the City of Helena's water reservation were calculated on a willingness-to-pay basis. Helena used a $2.47/1,000 gallons value which is what Helena municipal users are curretly paying. (Bd. Exh. 40, p. 253.) (Bd. Exh. 40, p. 253.)

17. The additional water provided by the water reservation will cost approximately $.50/1,000 gallons. (Bd. Exh. 15-C, p. 8.)

18. The direct benefits of the City of Helena's water reservation exceed the direct costs. (ARM 36.16.107B(4)(a).)

19. Indirect benefits of the City of Helena's reservation may include secondary economic benefits to the community and to the state, and expanding both the property and income tax base from increased population. (Bd. Exh. 15-A, p. 4-2.)

20. Indirect costs of the reservation may include loss of opportunity for other development and increased administrative costs. While not quantified these costs are minor. (Bd. Exh. 15-A, p. 4-8.)

21. Impacts of well field development on aquifers and surface flows are difficult to predict (Bd. Exh. 41, p. 63.) With a minor hydrologic connection between Prickly Pear Creek and the proposed deep wells, there should be no significant adverse environmental impact associated with the use of the City of ~~Helena's water~~ reservation. (Bd. Exhibit Helena No. 15-A, pp. 4-9.) The effects of individual municipal water reservation depletions on water quality have not been quantified (Bd. Exhibit 40, pp. 253-254), but should be very small. Any resulting health risks have not been quantified. No other non-quantifiable benefits or costs were identified. (Bd. Exh. 15-A.)

22. Net benefits of granting the City of Helena's water reservation exceed the net benefits of not granting the water reservation and the project is economically feasible. (ARM 36.16.107B(4)(b); ARM 36.16.102(9).)

23. The City of Helena identified one alternative source of water for future development: modification of the Missouri River Water Treatment Plant to remove arsenic and toxic algae. This alternative would not provide greater net benefits than the water reservation, (Bd. Exh. 15-A, p. 4-4) and is not reasonable. (ARM 36.16.107B(4)(c).)

24. Failure to reserve water for future municipal and industrial use by the City of Helena is likely to result in an irretrievable loss of a resource development opportunity. (Bd. Exh. 15-A, p. 4-10; ARM 36.16.107B(4)(d).)

25. As conditioned, the City of Helena's water reservation will have no significant adverse impact to public health, welfare, or safety. (ARM 36.16.107B(4)(e).)

F. OTHER FINDINGS RELATING TO BOARD DECISION (Mont. Code Ann. § 85-2-316(3)(B), (4)(a)(iv)(b)(5), (6), and (9)(e)(1991); ARM 36.16.107B(5) through (8).)

26. The water reservation by the City of Helena will be used wholly within the state and within the Missouri River basin. (Bd. Exh. 15-A; ARM 36.16.107B(5) and (6).)

27. The City of Helena has identified a management plan for the design, development, and administration of its water reservation. (Bd. Exh. 15-A, pp. 5-1 to 5-16.)

28. The City of Helena is capable of exercising reasonable diligence towards feasibly financing the project and applying reservation water to beneficial use in accordance with the management plan. (ARM 36.16.107B(7).)

29. The priority date of the City of Helena's water reservation is July 1, 1985. (§ 85-2-331(4).)

30. As conditioned, the City of Helena's water reservation will not adversely affect any senior water rights. (ARM 36.16.107B(8).)

31. The public interest in protecting domestic and stockwater rights with a priority date on or after July 1, 1985 and perfected prior to the final date of this order outweighs the values protected by the municipal reservations.

III. CONCLUSIONS OF LAW

1. City of Helena is a qualified applicant for a water reservation. (Mont. Code Ann. § 85-2-316(1)(1991).)

2. The purpose of the City of Helena's application is a beneficial use. (Mont. Code Ann. § 85-2-316(4)(a)(i)(1991); ARM 36.16.107B(1)(b).)

3. The need for the City of Helena has been established. Specifically, the City has established that there is a reasonable likelihood that future in-state competing water uses would consume the water available for the purpose of its reservation. (Mont. Code Ann. § 85-2-316(4)(a)(ii)(1991); ARM 36.16.107B(2).)

4. The methodologies and assumptions used by the City of Helena are suitable and accurate under present conditions. (ARM 36.16.107B(3)(a).) As modified, the City of Helena has established the amount of water needed to fulfill its reservation. (Mont. Code Ann. § 85-2-316(4)(a)(iii)(1991); ARM 36.16.107B(3).)

5. Based on a weighing and balancing of the evidence, the reservation by the City of Helena as modified and conditioned herein is in the public interest. (§ 85-2-316(4)(a)(iv); ARM 36.16.107B(4).)

6. Upper Missouri River water reservations approved by the Board shall have a priority date of July 1, 1985. (Mont. Code Ann. § 85-2-331(4).) The Board may determine the relative priorities of all reservations. (Mont. Code Ann. § 85-2-316(a)(e).)

7. The Board may grant, deny, modify or condition any reservation applied for. In no case may the Board make a reservation for more than the amount applied for. (Mont. Code Ann. § 85-2-316.)

8. The Board has no authority under the reservation statutes or any other statutes to determine, or alter any water right that is not a reservation. (Mont. Code Ann. § 85-2-316(14).)

IV. ORDER

1. Subject to all applicable modifications, conditions and limitations (including ~~but not~~ limited to the conditions applied to consumptive use reservations in Exhibits A and B attached to this order) the application of the City of Helena is granted for the following amount and flow of water: 16.4 cfs and 7,071 af/year.

10.6 mgd

2. The point of diversion and places of use are as set forth in the reservation application City of Helena and by reference are made a part of this Order.

3. The reservation is adopted subject to being perfected by December 31, 2025.

4. Relative to other reservations the priority date of the reservation shall be ahead of any other non-municipal reservation granted with a priority date of July 1, 1985. The reservation shall have equal priority with all other reservations granted to all municipalities.

5. Any and all liability arising from the reservation or the use of the reservation is the sole responsibility of the applicant. By granting such reservations, the Board on behalf of itself and the Department of Natural Resources and Conservation assumes no liability.

EXHIBIT A

Conditions Applicable to All Reservations Granted

1. Reservations granted in the Order are subject to all prior existing water rights in the source of supply, including storage rights, and any final determination of existing water rights as provided by Montana law. Reservations are also subject to all prior Federal and Indian reserved rights. The reservants may use reserved water only when such use will not adversely affect prior water rights.

2. The reservations are subject to all Federal, State, and Local laws.

3. In accordance with rules adopted by the Board, but not less than every two years after the date of the Order granting the reservation, the reservant shall submit a report to the Board with such information as the Board may reasonably require.

4. Pursuant to Mont. Code Ann. § 85-2-316(10)(1991), the Board shall review water reservations granted in this order at least every 10 years to insure the objectives of the reservation are being met. Where the Board determines the objectives are not being met, it may, after notice and hearing, extend the term, modify, or revoke the reservation.

5. Any proposed changes of the reservation in point of diversion, place of use, purpose of use, or place of storage, from that originally granted by the Board, shall be made in accordance with the requirements of Mont. Code Ann. § 85-2-402 (1991). Further, the Board shall not approve the change unless provisions of Mont. Code Ann. § 85-2-316 (1991) are met.

6. The reservations are subject to all water uses which do not require a permit under Mont. Code Ann. § 85-2-306 (1991) that were beneficially use prior to the date of the Order granting the reservations.

7. The reservations may be subordinated to permits issued prior to the date of the Order granting the reservations pursuant to Mont. Code Ann. § 85-2-316(9)(d)(1991).

8. Conditions of this Order may be added, modified or deleted by the Board after notice and hearing.

9. All decisions made by the Board regarding water reservations granted in this order are appealable under the provisions of the Montana Administrative Procedure Act.

EXHIBIT B

Conditions Applicable to All Consumptive Use Reservations Granted

1. Water diverted for consumptive use projects shall be measured daily during project operation using measuring devices approved by DNRC. The reservant shall submit records of time period and amount of water diverted to the Board or DNRC upon request.

2. Further environmental review is required for irrigation projects JV-202, CHS-5, and VAS-1 prior to development. The Board may modify or revoke the reservation based upon this review.

3. For projects where the source is groundwater, a site-specific study to define the local geology, extent of the aquifer, aquifer hydraulic characteristics, recharge-discharge relationships, surface water interconnection and water quality must be submitted to the Board before project development. The investigation shall be proportional to the volume of groundwater required, number of wells, and the potential for impact of the development on senior appropriators.

4. In managing their water reservation, the Broadwater, Gallatin, and Jefferson Valley Conservation Districts shall use the Administrative Procedures contained in the applications of the conservation districts below Canyon Ferry Dam.

5. The Administrative Procedures for all conservation districts are amended to include the procedure for Revocation of Authorization as set out in Attachment I herein.

Appendix 3-E Missouri River Water Service Contract

United States Department of the Interior

BUREAU OF RECLAMATION
Great Plains Region
P.O Box 36900
Billings, Montana 59107-6900

RECEIVED
JUL 14 2005
HDR ENGINEERING, INC

RECEIVED
DEC 30 2004
CITY MANAGER

IN REPLY REFER TO:
GP-3100
WTR-4.03

DEC 29 2004

CITY OF HELENA
PUBLIC WORKS
JAN 03 2005
RECEIVED

Mr. Tim Burton, City Manager
City of Helena
316 North Park
Helena, Montana 59623

Subject: Water Service Contract No. 049E670131, Between the United States and City of Helena – Helena Valley Unit, Pick-Sloan Missouri Basin Project, Montana

Dear Mr. Burton:

Enclosed is a fully executed duplicate original of Water Service Contract No. 049E670131. The National Environmental Policy Act documentation for this agreement has been satisfied with an Environmental Assessment. Reclamation will continue to work with the City on development of a contract administration memorandum.

Thank you for your cooperation and assistance in the execution of this agreement.

If you have any questions, please contact Mark Beatty at 406-247-7732.

Sincerely,

Gerald W. Kelso
For Acting Regional Director

Enclosure

Standard Contract Articles

Article		Page
10.	Contract Drafting Considerations	9
11.	Charges For Delinquent Payments	9
12.	General Obligation - Benefits Conditioned Upon Payment	9
13.	Notices	10
14.	Contingent On Appropriation Or Allotment Of Funds	10
15.	Officials Not To Benefit	11
16.	Changes In City's Organization	11
17.	Assignment Limited - Successors And Assigns Obligated	11
18.	Books, Records, And Reports	11
19.	Rules, Regulations, And Determinations	12
20.	Protection Of Water And Air Quality	12
21.	Water Conservation	13
22.	Equal Employment Opportunity	13
23.	Compliance With Civil Rights Laws And Regulations	15
24.	Medium For Transmitting Payments	15
25.	Contamination Or Pollution Of Federal Property	16
26.	Entire Agreement	17
	Exhibit A	19

b. WHEREAS, the Parties hereto have entered into Contract No. 14-06-600-2078, dated August 27, 1956, as amended and supplemented, hereinafter called the "1956 contract," for furnishing a supplemental water supply; and

c. WHEREAS, the 1956 contract will expire December 31, 2004; and

d. WHEREAS, the City has requested the renewal of the 1956 contract pursuant to the Federal Reclamation laws and the laws of the State of Montana, and has fulfilled its obligations to date under the 1956 contract; and

e. WHEREAS, the City has requested that this Contract begin as a secondary water supply and gradually increase into a primary water supply during the term of this Contract; and

f. WHEREAS, the United States agrees to the renewal of the 1956 contract pursuant to applicable Federal laws, rules and regulations and state laws, particularly Subsection 9(c)(2) of the Reclamation Project Act of 1939 (53 Stat. 1187) and the Act of June 21, 1963 (77 Stat. 68); and

---

NOW, THEREFORE, in consideration of the mutual and dependent covenants herein contained, it is hereby mutually agreed as follows:

GENERAL DEFINITIONS

1. Where used in this Contract, the terms:

a. "1956 contract" shall mean the specific contract the Parties hereto entered into August 27, 1956, which is numbered Contract No. 14-06-600-2078, as amended and supplemented.

b. "Contract" shall mean and include articles 1 through 26 hereof.

j. "Transferred works" shall mean, the Helena Valley Pumping Plant, the Helena Valley Tunnel, the Helena Valley Main Canal and the Helena Valley Regulating Dam and Reservoir, and all works appurtenant thereto, all operated by the District.

k. "Water supply works" include all Reserved works and Transferred works and shall mean portions of the Helena Valley Unit including the Helena Valley outlet works in the face of Canyon Ferry Dam, the Helena Valley Pumping Plant, the Helena Valley Tunnel, the Helena Valley Main Canal and the Helena Valley Regulating Dam and Reservoir, and such portions of the Canyon Ferry Unit including the Canyon Ferry Dam and Reservoir which are necessary to store the City's water supply, and all appurtenant facilities.

l. "Year" shall mean the period January 1 through the following December 31.

EFFECTIVE DATE, TERM AND TERMINATION OF 1956 CONTRACT

2. This Contract shall become effective January 1, 2005, and on that date shall supersede and replace the 1956 contract in its entirety. The term of this Contract shall extend for a period of 40 years from the effective date; *Provided*, this Contract may be renewed upon written request by the City to the United States on or before two years prior to the date of expiration hereof. Such renewal shall be based on applicable laws, rules and regulations in effect at the time. The charges to be paid by the City to the United States under any such renewal shall be upon such terms and conditions as may be mutually agreeable.

WATER TO BE FURNISHED TO THE CITY

3. a. The United States has constructed the Water supply works to supply the City with water. Each year the United States will provide to the City that quantity of water required for beneficial use, if available as determined by the Contracting Officer, be it for domestic, commercial, industrial, or municipal purposes not to exceed 11,300 acre feet in any one year. Water deliveries shall be made at such times and in such quantities, within the capacity of the Water supply works, as provided herein.

Payment shall be based on an estimate of such costs with adjustments made on the July 1 bill to reflect the actual costs of the previous year; Provided, That in order to avoid incurring a deficit in the funding of such costs, the Contracting Officer may bill the City for any projected deficit and the City shall pay such amount within 30 days after receipt of such notice thereof.

(1) The City's share, as determined by the Contracting Officer, of the annual OM&R costs incurred by the United States on the Reserved works, and the District and/or the United States on the Transferred works for the full annual contracted amount of water described in Article 3. No adjustment will be made to the City's OM&R bill for the full annual water supply which is unused.

(2) Such costs which are not included under (1) above that the United States incurs for administration of this Contract which are properly chargeable to the City plus an appropriate share of the costs for administration, supervision, general expense and indirect costs as are properly chargeable to the City as determined by the Contracting Officer.

(3) Such costs for inspections, investigations, reviews and repairs of Water supply works, as determined by the Contracting Officer to be reimbursable by the City.

b. The Contracting Officer shall, to the extent practicable and foreseeable, annually inform the City of the estimate of the costs to be paid by the City in accordance with this Article in advance for the City's use in its budgeting process.

c. The Transferred works were constructed to serve lands in the District and to provide a municipal and industrial water supply to the City. It is the intention of the United States that the District shall operate and maintain these works. The cost of the OM&R of such works shall be apportioned between the District and the City, as agreed upon by said District and the City, or, in the absence of such agreement, as determined by the Contracting Officer. The District shall divert and carry the water of both the District and the City through such works, and the City shall pay to the District the proportionate share of the costs of such operation and maintenance assignable to the City. The cost of OM&R of the transferred works shall include any OM&R costs charged to the District by Reclamation for such works. Payment of such actual

UNITED STATES NOT LIABLE FOR WATER SHORTAGE

8. On account of drought, hostile diversion, actions taken to preserve project structures, or any other causes beyond the control of the Secretary, there may occur at times during any Year a shortage in the quantity of water available for delivery to the City by the United States pursuant to this Contract. In no event shall any liability accrue against the United States or against any of its officers, agents, or employees, acting within the scope of their employment, for any damage, direct or indirect, arising out of such shortage.

LICENSE FOR CITY FACILITIES ON RECLAMATION LAND

9. The United States hereby grants the City, subject to prior existing rights, access to, and a license to construct, operate, maintain and replace the facilities necessary for the delivery and treatment of the City's water supply, which were constructed during the term of the 1956 contract, upon and across land of the United States in the SE¼NW¼ and the NE¼SW¼ of Section 8, Township 10 North, Range 2 West, Principal Meridian, Montana, for so long as this Contract is in effect. Additional construction beyond OM&R of the City's existing facilities requires further permission from the Contracting Officer. The City agrees to remove all of its equipment upon termination or expiration of this contract, unless this contract is renewed pursuant to Article 2 of this Contract. The pipeline and other facilities will be operated and maintained on or across property of the United States subject to such restrictions and regulations as to type, location, method of operation and maintenance as may be prescribed by the Contracting Officer. It is specifically recognized that this contract does not grant to the City the right of access to the waters of the Helena Valley Regulating Reservoir or to the adjacent lands of the United States for any purpose except as provided in this contract for operation and maintenance of the City's facilities.

distributed among the City's water users and notwithstanding the default of individual water users in their obligation to the City.

b The payment of charges becoming due pursuant to this Contract is a condition precedent to receiving benefits under this Contract. The United States shall not make water available to the City through Helena Valley Project facilities during any period in which the City is in arrears in the advance payment of any operation and maintenance charges due the United States or in arrears for more than 12 months in the payment of any construction charges due the United States. The City shall not deliver water under the terms and conditions of this Contract for lands or parties that are in arrears in the advance payment of water rates as levied or established by the City.

NOTICES

13. Any notice, demand, or request authorized or required by this Contract shall be deemed to have been given, on behalf of the City, when mailed, postage prepaid, or delivered to the Regional Director, Great Plains Region, Bureau of Reclamation, P.O. Box 36900, Billings, MT 59107-6900, and on behalf of the United States, when mailed, postage prepaid, or delivered to the Public Works Director, City of Helena, 316 North Park, Helena, MT 59623. The designation of the addressee or the address may be changed by notice given in the same manner as provided in this Article for other notices.

CONTINGENT ON APPROPRIATION OR ALLOTMENT OF FUNDS

14. The expenditure or advance of any money or the performance of any obligation of the United States under this Contract shall be contingent upon appropriation or allotment of funds. Absence of appropriation or allotment of funds shall not relieve the City from any obligations under this Contract. No liability shall accrue to the United States in case funds are not appropriated or allotted.

RULES, REGULATIONS, AND DETERMINATIONS

19. a. The Parties agree that the delivery of water or the use of Federal facilities pursuant to this Contract is subject to Federal Reclamation law, as amended and supplemented, and the rules and regulations promulgated by the Secretary of the Interior under Federal Reclamation law.

b. The Contracting Officer shall have the right to make determinations necessary to administer this Contract that are consistent with the expressed and implied provisions of this Contract, the laws of the United States and the State of Montana, and the rules and regulations promulgated by the Secretary of the Interior. Such determinations shall be made in consultation with the City.

PROTECTION OF WATER AND AIR QUALITY

20. a. Project facilities used to make available and deliver water to the City shall be operated and maintained in the most practical manner to maintain the quality of the water at the highest level possible as determined by the Contracting Officer: *Provided, That* the United States does not warrant the quality of the water delivered to the City and is under no obligation to furnish or construct water treatment facilities to maintain or improve the quality of water delivered to the City.

b. The City shall comply with all applicable water and air pollution laws and regulations of the United States and the State of Montana; and shall obtain all required permits or licenses from the appropriate Federal, State, or local authorities necessary for the delivery of water by the City; and shall be responsible for compliance with all Federal, State, and local water quality standards applicable to surface and subsurface drainage and/or discharges generated through the use of Federal or City facilities or Project water provided by the City within the City's Project Water Service Area.

City's commitments under Section 202 of Executive Order 11246 of September 24, 1965, and shall post copies of the notice in conspicuous places available to employees and applicants for employment.

d. The City will comply with all provisions of Executive Order 11246 of September 24, 1965, and of the rules, regulations, and relevant orders of the Secretary of Labor.

e. The City will furnish all information and reports required by Executive Order 11246 of September 24, 1965, and by the rules, regulations, and orders of the Secretary of Labor, or pursuant thereto, and will permit access to his books, records, and accounts by the Contracting Agency and the Secretary of Labor for purposes of investigation to ascertain compliance with such rules, regulations, and orders.

f. In the event of the City's noncompliance with the nondiscrimination clauses of this Contract or with any of such rules, regulations, or orders, this Contract may be canceled, terminated, or suspended in whole or in part and the City may be declared ineligible for further Government contracts in accordance with procedures authorized in Executive Order 11246 of September 24, 1965, and such other sanctions may be imposed and remedies invoked as provided in Executive Order 11246 of September 24, 1965, or by rule, regulation, or order of the Secretary of Labor, or as otherwise provided by law.

g. The City will include the provisions of Subarticles a through g in every subcontract or purchase order unless exempted by the rules, regulations, or orders of the Secretary of Labor issued pursuant to Section 204 of Executive Order 11246 of September 24, 1965, so that such provisions will be binding upon each subcontractor or vendor. The City will take such action with respect to any subcontract or purchase order as may be directed by the Secretary of Labor as a means of enforcing such provisions, including sanctions for noncompliance: *Provided, However*, that in the event the City becomes involved in, or is threatened with, litigation with a subcontractor or vendor as a result of such direction, the City may request the United States to enter into such litigation to protect the interests of the United States.

method of payment may include checks, wire transfers, or other types of payment specified by the United States.

b. Upon execution of the contract, the City shall furnish the Contracting Officer with the City's taxpayer identification number (TIN). The purpose for requiring the City's TIN is for collecting and reporting any delinquent amounts arising out of the City's relationship with the United States.

CONTAMINATION OR POLLUTION OF FEDERAL PROPERTY

25. a. The City shall not allow contamination or pollution of Federal Project lands, Project waters, or Project works of the United States or administered by the United States for which the City has the responsibility for care, operation, and maintenance by its employees or agents. The City shall also take reasonable precautions to prevent such contamination or pollution by third parties.

b. The City shall comply with all applicable Federal, State, and local laws and regulations and Reclamation policies and instructions existing, or hereinafter enacted or promulgated, concerning any hazardous material that will be used, produced, transported, stored, or disposed of on or in Federal Project lands, Project waters or Project works.

c. "Hazardous Material" means any substance, pollutant, or contaminant listed as hazardous under the Comprehensive Environmental Response, Compensation, and Liability Act of 1980, as amended, 42 U.S.C. § 9601, *et seq.*, and the regulations promulgated pursuant to that Act. In addition, hazardous material shall include thermal pollution, refuse, garbage, sewage effluent, industrial waste, petroleum products, mine tailings, mineral salts, misused pesticides, pesticide containers, or any other pollutants.

d. Upon discovery of any event which may or does result in contamination or pollution of Federal Project lands, Project waters, or Project works, the City shall initiate emergency measures to protect health and safety and the environment if necessary and shall report such discovery with full details of the actions taken to the Contracting Officer. Reporting

IN WITNESS WHEREOF, the parties hereto have signed their names the day and year first above written.

THE UNITED STATES OF AMERICA

By _____

Acting Regional Director

CITY OF HELENA

By _____

Tim Burton
City Manager

ATTEST:

Robin Brown, deputy

~~Secretary~~ City Clerk

APPROVED AS TO FORM:

_____

David L. Nielson, City Atty.

DATE: Dec. 28, 2004

DUPLICATE ORIGINAL

OFFICIAL FILE COPY
RECEIVED
MAR 16 05
REPLY DATE
INFO. COPY TO:
DATE | INITIAL | TO
3100
CORRESPONDENCE
REQUEST
CONTROL NO.

Contract Administration Memo
Contract No. 049D670131
between the United States of America
and the City of Helena

Background

The United States of America (United States or Contracting Officer) and the City of Helena (City), hereinafter collectively called the "Parties", entered into Contract No. 049D670131 (Contract) on December 29, 2004.

The Parties, by mutual agreement, wish to clarify, through this document, their understanding of how certain provisions of the Contract will be administered, and clarify the rationale for rates that were negotiated under this Contract, so that officials of the Parties will have a record of such understandings for future use in administering the Contract.

It is specifically noted that nothing contained in this Contract Administration Memo (Memo) supersedes or replaces provisions of the Contract; and, if conflict is found to exist between this Memo and the actual provisions of the Contract, the Contract provisions shall govern the resolution of any dispute.

Administration Understandings

Article 4

A. The negotiated rate of the water at Canyon Ferry Dam is based on the lost opportunity for electrical generation throughout the Missouri River for federal power. The rate used for power foregone is 16.51 mills/KWh, the preference or firm rate at the time of the Contract. Reclamation proposed using a higher rate based on the cost of power development, however, the firm power rate was negotiated for this Contract taking other factors into consideration. The quantity of water that by-passes and is lost for generation at Canyon Ferry Dam is 2.09 acre-feet for every acre foot provided to the City. The quantity of water lost at the other dams within the federal Missouri River

system are shown on Exhibit A. [BOR--Foregone/Opportunity cost of Power], attached to this Memo. It was estimated the City of Helena returns to the Missouri River downstream of Canyon Ferry Dam 80% of the water taken from Canyon Ferry Reservoir. Also, the water needed to run the water pumps at Canyon Ferry is returned to the Missouri River. For every acre-foot of water delivered to Helena Valley Regulating Reservoir for the City's use, 2.09 acre-feet are released through the Canyon Ferry Dam. 1.09 acre-feet are used to power the pumps and the other acre-foot is delivered to Helena Valley Regulating Reservoir. Thus, the federal power generation facilities downstream of Canyon Ferry have the returned water used for the pump operation and 80% of the amount received by the City available to generate power. Therefore, the lost opportunity for electrical generation for the first year is $6.20 per acre-foot, as shown on the attached Exhibit A.

B. The annual inflation adjustment for increases in power rates, which is the basis for the lost opportunity calculation, was assumed at 4.156%.

C. The value of the delivery of water from Canyon Ferry Dam through the pump and piping to the Helena Valley Regulating Reservoir is $7.20 per acre-foot. Since this charge is a capital charge based on the construction of the delivery system owned by the United States, this is a constant throughout the term of the Contract and not subject to annual inflation.

D. For the first year of the Contract, the negotiated rate of the water at the regulating reservoir is $13.40, which is ($6.20 + $7.20). The negotiated rate for the second year is $13.66, computed as [($6.20 x 1.04156) + $7.20]. For subsequent years the $6.20 is adjusted for inflation by compounding it by 4.156% annually as shown on the attached Exhibit B.

E. Regardless of the validity of the assumptions used in negotiating rates under the Contract, there is no provision for the negotiated rates in the Contract to be adjusted except as provided on Exhibit A of the Contract.

F. The City will receive a financial credit for water paid for but not used during the prior year. The lower priced prior year unused water does not carry forward to the next year, but instead a credit is given for the unused water at the prior year per acre-foot rate. As an example, the City will pay $13.40 per acre foot for 11,300 acre-feet in 2005. If the City only uses 6,300 acre feet of water, leaving 5,000 acre feet unused, they will receive a credit of $67,000 on their 2006 bill. (5,000 acre feet X $13.40 = $67,000)

Article 8

Under Article 8, though the City agrees the United States is not liable for any water shortage, Reclamation agrees to cooperate and work with the City on conservation measures to mitigate conditions that may cause water shortages. It was further agreed that in case of water quantity shortages, Reclamation will use its best efforts not to terminate the water supply to the City. The Parties understand that during times of water shortage the United States reserves the right to apportion the project water supply among those entitled to receive water from that water supply. The apportionment shall be made only after consultation with the City and the Helena Valley Irrigation District.

Subarticle 12b

Under Subarticle 12(b), the City does not send advance billing to water consumers. Water bills are based upon water used during the previous billing cycle. The water rates, however, anticipate the payments as they become due under this Contract; therefore, consumers are prepaying through this rate structure for the contract payments that become due later.

THE UNITED STATES OF AMERICA

By _____
Area Manager

Date 28 APRIL 2005

CITY OF HELENA

By _____
City Manager

Date 3-11-05

ATTEST:

_____
Secretary

APPROVED AS TO FORM:

_____

DATE: March 10, 2005

EXHIBIT A

BOR -- Foregone / Opportunity Cost of Power
Market Potential Analysis

	Acre Feet Diverted at Canyon Ferry	Acre Feet Returned: From HVID Pump House	Acre Feet Returned: By the City of Helena	Net Acre Feet Diverted	Loss Rate from Prior Dam	Acre Feet for Generation Lost
	(+)	(-)	(-)	(=)		
Canyon Ferry	2.0900	na	na	2.0900	0.00%	2.0900
Fort Peck	2.0900	1.0900	0.8000	0.2000	7.00%	0.1860
Garrison				0.1860	7.00%	0.1730
Oahe				0.1730	3.00%	0.1678
Big Bend				0.1678	1.00%	0.1661
Fort Randall				0.1661	1.00%	0.1645
Gavins Point				0.1645	1.00%	0.1628

	Acre Feet for Generation Lost	Generation KWh per Acre Foot	Generation KWh Lost	BOR Sales Rate Cost @ 16.51 mills / KWh	Spot Market Buy Rate Cost @ 37.08 mills / KWh	New Plant Rate Cost @ 53.42 mills / KWh	2002 Average Commercial Cost @ 65.24 mills / KWh
Canyon Ferry	2.0900	122.977	257.02	$ 4.24	$ 9.53	$ 13.73	$ 16.77
Fort Peck	0.1860	165.000	30.69	0.51	1.14	1.64	2.00
Garrison	0.1730	152.940	26.46	0.44	0.98	1.41	1.73
Oahe	0.1678	162.490	27.26	0.45	1.01	1.46	1.78
Big Bend	0.1661	56.540	9.39	0.16	0.35	0.50	0.61
Fort Randall	0.1645	106.550	17.52	0.29	0.65	0.94	1.14
Gavins Point	0.1628	40.550	6.6	0.11	0.24	0.35	0.43
				$ 6.20	$ 13.90	$ 20.03	$ 24.46
Canyon Ferry			per Acre Foot =	$ 2.03	$ 4.56	$ 6.57	$ 8.02
Fort Peck			per Acre Foot =	2.74	6.13	8.82	10.75
Garrison			per Acre Foot =	2.54	5.67	8.15	10.00
Oahe			per Acre Foot =	2.68	6.02	8.70	10.61
Big Bend			per Acre Foot =	0.96	2.11	3.01	3.67
Fort Randall			per Acre Foot =	1.76	3.95	5.72	6.93
Gavins Point			per Acre Foot =	0.68	1.47	2.15	2.64
				Average = $ 1.91 per acre foot	Average = $ 4.27 per acre foot	Average = $ 6.16 per acre foot	Average = $ 7.52 per acre foot

Prepared by:
Tim Magee,
City of Helena

EXHIBIT B

Reclamation Proposal -- Decembe 6, 2004

Est. Future Volumes

	Year	Actual Volume	Use Rate	Base Rate	Base + Use Subtotal	BOR's O&M	Total BOR Rate	Use Rate	Base Rate	Base + Use Rate	BOR's O&M With Inflation	Total BOR Rate	Total Annual BOR Cost	Irrigation District Cost	Total Annual Cost	Cost per Acre Foot
			$ 7.20 per Acre Foot Added to Base Rate	Increase by 4.156% Annually							3.00% Inflation / yr.			$ 84,310.00 HVID Total Cost; 59.305% City Share; $ 50,000.13; 3.00% Inflation / yr.		
				16.51 KWh = $ 6.20												
1	2005	1,821	$ 7.20	$ 13.40	$ 2.12	$ 15.52	$ 13,111.20	$ 11,290.20	$ 24,401.40	$ 3,862.06	$ 28,263.46	$ 28,263.46	$ 50,000.13	$ 78,263.59	$ 42.98
2	2006	1,861	7.20	6.46	13.66	2.14	15.80	13,399.20	12,022.06	25,421.26	3,977.92	$ 29,399.18	$ 29,399.18	51,500.13	$ 80,899.31	$ 43.47
3	2007	1,902	7.20	6.73	13.93	2.15	16.08	13,694.40	12,800.46	26,494.86	4,097.26	$ 30,592.12	$ 30,592.12	53,045.13	$ 83,637.25	$ 43.97
4	2008	1,944	7.20	7.01	14.21	2.17	16.38	13,996.80	13,627.44	27,624.24	4,220.18	$ 31,844.42	$ 31,844.42	54,636.48	$ 86,480.90	$ 44.49
5	2009	1,987	7.20	7.30	14.50	2.19	16.69	14,306.40	14,505.10	28,811.50	4,346.79	$ 33,158.29	$ 33,158.29	56,275.57	$ 89,433.86	$ 45.01
6	2010	4,938	7.20	7.60	14.80	0.91	15.71	35,553.60	37,528.80	73,082.40	4,477.19	$ 77,559.59	$ 77,559.59	57,963.84	$ 135,523.43	$ 27.45
7	2011	5,047	7.20	7.92	15.12	0.91	16.03	36,338.40	39,972.24	76,310.64	4,611.50	$ 80,922.14	$ 80,922.14	59,702.76	$ 140,624.90	$ 27.86
8	2012	5,159	7.20	8.25	15.45	0.92	16.37	37,144.80	42,561.75	79,706.55	4,749.85	$ 84,456.40	$ 84,456.40	61,493.84	$ 145,950.24	$ 28.29
9	2013	5,273	7.20	8.59	15.79	0.93	16.72	37,965.60	45,295.07	83,260.67	4,892.35	$ 88,153.02	$ 88,153.02	63,338.66	$ 151,491.68	$ 28.73
10	2014	5,398	7.20	8.95	16.15	0.93	17.08	38,865.60	48,312.10	87,177.70	5,039.12	$ 92,216.82	$ 92,216.82	65,238.82	$ 157,455.64	$ 29.17
11	2015	6,673	7.20	9.32	16.52	0.78	17.30	48,045.60	62,192.36	110,237.96	5,190.29	$ 115,428.25	$ 115,428.25	67,195.98	$ 182,624.23	$ 27.37
12	2016	6,820	7.20	9.71	16.91	0.78	17.69	49,104.00	66,222.20	115,326.20	5,346.00	$ 120,672.20	$ 120,672.20	69,211.86	$ 189,884.06	$ 27.84
13	2017	6,970	7.20	10.11	17.31	0.79	18.10	50,184.00	70,466.70	120,650.70	5,506.38	$ 126,157.08	$ 126,157.08	71,288.22	$ 197,445.30	$ 28.33
14	2018	7,122	7.20	10.53	17.73	0.80	18.53	51,278.40	74,994.66	126,273.06	5,671.57	$ 131,944.63	$ 131,944.63	73,426.87	$ 205,371.50	$ 28.84
15	2019	7,249	7.20	10.97	18.17	0.81	18.98	52,192.80	79,521.53	131,714.33	5,841.72	$ 137,556.05	$ 137,556.05	75,629.68	$ 213,185.73	$ 29.41
16	2020	7,379	7.20	11.43	18.63	0.82	19.45	53,128.80	84,341.97	137,470.77	6,016.97	$ 143,487.74	$ 143,487.74	77,898.57	$ 221,386.31	$ 30.00
17	2021	7,536	7.20	11.91	19.11	0.82	19.93	54,259.20	89,753.76	144,012.96	6,197.48	$ 150,210.44	$ 150,210.44	80,235.53	$ 230,445.97	$ 30.58
18	2022	7,697	7.20	12.40	19.60	0.83	20.43	55,418.40	95,442.80	150,861.20	6,383.40	$ 157,244.60	$ 157,244.60	82,642.60	$ 239,887.20	$ 31.17
19	2023	7,860	7.20	12.92	20.12	0.84	20.96	56,592.00	101,551.20	158,143.20	6,574.90	$ 164,718.10	$ 164,718.10	85,121.88	$ 249,839.98	$ 31.79
20	2024	8,027	7.20	13.46	20.66	0.84	21.50	57,794.40	108,043.42	165,837.82	6,772.15	$ 172,609.97	$ 172,609.97	87,675.54	$ 260,285.51	$ 32.43
21	2025	8,197	7.20	14.02	21.22	0.85	22.07	59,018.40	114,921.94	173,940.34	6,975.31	$ 180,915.65	$ 180,915.65	90,305.81	$ 271,221.46	$ 33.09
22	2026	8,370	7.20	14.60	21.80	0.86	22.66	60,264.00	122,202.00	182,466.00	7,184.57	$ 189,650.57	$ 189,650.57	93,014.98	$ 282,665.55	$ 33.77
23	2027	8,547	7.20	15.21	22.41	0.87	23.28	61,538.40	129,999.87	191,538.27	7,400.11	$ 198,938.38	$ 198,938.38	95,805.43	$ 294,743.81	$ 34.49
24	2028	8,780	7.20	15.84	23.04	0.87	23.91	63,216.00	139,075.20	202,291.20	7,622.11	$ 209,913.31	$ 209,913.31	98,679.59	$ 308,592.90	$ 35.15
25	2029	9,026	7.20	16.50	23.70	0.87	24.57	64,987.20	148,929.00	213,916.20	7,850.78	$ 221,766.98	$ 221,766.98	101,639.98	$ 323,406.96	$ 35.83
26	2030	9,277	7.20	17.19	24.39	0.87	25.26	66,794.40	159,471.63	226,266.03	8,086.30	$ 234,352.33	$ 234,352.33	104,689.18	$ 339,041.51	$ 36.55
27	2031	9,426	7.20	17.90	25.10	0.88	25.98	67,867.20	168,725.40	236,592.60	8,328.89	$ 244,921.49	$ 244,921.49	107,829.86	$ 352,751.35	$ 37.42
28	2032	9,576	7.20	18.64	25.84	0.90	26.74	68,947.20	178,496.64	247,443.84	8,578.76	$ 256,022.60	$ 256,022.60	111,064.76	$ 367,087.36	$ 38.33
29	2033	9,728	7.20	19.41	26.61	0.91	27.52	70,041.60	188,820.48	258,862.08	8,836.12	$ 267,698.20	$ 267,698.20	114,396.70	$ 382,094.90	$ 39.28
30	2034	9,881	7.20	20.22	27.42	0.92	28.34	71,143.20	199,793.82	270,937.02	9,101.20	$ 280,038.22	$ 280,038.22	117,828.60	$ 397,866.82	$ 40.27
31	2035	10,035	7.20	21.06	28.26	0.93	29.19	72,252.00	211,337.10	283,589.10	9,374.24	$ 292,963.34	$ 292,963.34	121,363.46	$ 414,326.80	$ 41.29
32	2036	10,191	7.20	21.94	29.14	0.95	30.09	73,375.20	223,590.54	296,965.74	9,655.47	$ 306,621.21	$ 306,621.21	125,004.36	$ 431,625.57	$ 42.35
33	2037	10,348	7.20	22.85	30.05	0.96	31.01	74,505.60	236,451.80	310,957.40	9,945.13	$ 320,902.53	$ 320,902.53	128,754.49	$ 449,657.02	$ 43.45
34	2038	10,507	7.20	23.80	31.00	0.97	31.97	75,650.40	250,066.60	325,717.00	10,243.48	$ 335,960.48	$ 335,960.48	132,617.12	$ 468,577.60	$ 44.60
35	2039	10,667	7.20	24.79	31.99	0.99	32.98	76,802.40	264,434.93	341,237.33	10,550.79	$ 351,788.12	$ 351,788.12	136,595.63	$ 488,383.75	$ 45.78
36	2040	10,828	7.20	25.82	33.02	1.00	34.02	77,961.60	279,578.96	357,540.56	10,867.31	$ 368,407.87	$ 368,407.87	140,693.50	$ 509,101.37	$ 47.02
37	2041	10,942	7.20	26.89	34.09	1.02	35.11	78,782.40	294,230.38	373,012.78	11,193.33	$ 384,206.11	$ 384,206.11	144,914.31	$ 529,120.42	$ 48.36
38	2042	11,056	7.20	28.01	35.21	1.04	36.25	79,603.20	309,678.56	389,281.76	11,529.13	$ 400,810.89	$ 400,810.89	149,261.74	$ 550,072.63	$ 49.75
39	2043	11,170	7.20	29.17	36.37	1.06	37.43	80,424.00	325,828.90	406,252.90	11,875.01	$ 418,127.91	$ 418,127.91	153,739.59	$ 571,867.50	$ 51.20
40	2044	11,284	7.20	30.38	37.58	1.08	38.66	81,244.80	342,807.92	424,052.72	12,231.26	$ 436,283.98	$ 436,283.98	158,351.78	$ 594,635.76	$ 52.70
		7,662 average Acre Feet	$ 7.20 average of Rates	$ 15.30 average of Rates	$ 22.50 average of Rates	$ 1.06 average of Rates	$ 23.56 average of Rates	$ 2,206,792.80	$ 5,398,887.49	$ 7,605,680.29	$ 291,204.36	$ 7,896,884.65	$ 7,896,384.65	$ 3,770,072.96	$ 11,666,957.61	$ 37.25 Annual Cost Average
													$ 25.76 Average Per Acre Foot	$ 12.30 Average Per Acre Foot	$ 38.07 Average Per Acre Foot	

Appendix 3-F Model Setup and Calibration

Model Setup and Calibration

Planning the specific fire flow availability to meet the requirements of each building individually within a jurisdiction would require an excessive amount of resources. Typically, communities identify "typical" fire flow requirements by land use or zoning designations as a way of assessing the levels of service to be provided to customers on an equivalent basis. For example, the water system would provide all single family residences the same level of fire protection, regardless of floor area or construction type. The typical fire flow requirements used for planning the City of Helena water system are described below.

The floor area for residential construction normally ranges from 1,200 square feet (sf) to as large as 4,000 sf. Construction normally consists of wood frame and fire sprinkling is not normally provided. Per the UFC, the larger wood frame homes would require a greater amount of fire flow than the smaller wood frame homes. A 4,000 square foot home requires 1,000 gpm for a 2 hour duration. Homes that are larger than 4,000 sf are less common and could require greater fire flow. For example, the Reeder's Village and Forrest Estates subdivisions include homes with 4,800 square feet, thus requiring 1,750 gpm for 2 hours, per the UFC. Improvements to the distribution system to serve larger homes could be evaluated on a case-by-case basis.

According to Helena zoning, some light commercial is permitted in some residential zones. This light commercial includes schools, doctor's offices, pharmacies, etc. Maximum commercial square footage required in an R-O district (residential office) is 1,500 sf. A commercial structure up to 12,700 sf is only required to have 1,500 gpm for 2 hours. For 1750 gpm flow requirement, a commercial structure can be up to 17,000 sf. Based on our interpretation of the code, residential areas will be modeled with a 1000 gpm fire flow requirement (1750 gpm goal), with the exception of R-O, which will be classified at 1750 gpm. Total storage requirement for these zones will be dependent on whether any commercial is permitted per current zoning.

Business zones, which include mid rise and high rise structures, commercial buildings, warehouses, schools, and retail businesses, have fire flow requirements that range depending on the construction type and square footage.

Commercial-light manufacturing (CLM), manufacturing-industrial (M-I), and the Airport zoning include structures with large square footage. The largest identified from aerial photography was at almost 90,000 sf. Required fire flow for this extreme case is 4250 gpm for four hours. Other structures range between 40,000 and 70,000 sf in this zone, which places fire flow requirements between 3,000 and 3,750 gpm for 3 hours. The result of the Table 7-2 in the previous Fire Flow Requirements section summarizes the varying land use types located in each zone.